Final

TRAFFIC VOLUME FORECAST

State Road 25, Hoosier Heartland Highway (HHH)
Interstate 65 to Carroll County Line
Tippecanoe County
Des. No. 9802920

Indiana Department of Transportation

Indianapolis, Indiana

November 2006

TABLE OF CONTENTS

Report ..... Section 1

- Executive Summary
- AM & PM Design Hour Intersection Summaries
  - State Road 25 (HHH) at Southbound I-65 Ramp
  - State Road 25 (HHH) at Northbound I-65 Ramp
  - State Road 25 (HHH) at SR 25 Connector (West)
  - County Road 300 North at LSR (County Road 400 East)
  - State Road 25 (HHH) at County Road 500 East Connector
  - County Road 500 East at County Road 500 East Connector
  - County Road 625 East over State Road 25 (HHH)
  - State Road 25 (HHH) at County Road 450 North
  - State Road 25 (HHH) at County Road 750 East
  - State Road 25 (HHH) at County Road 900 East Connector
  - County Road 900 East at County Road 900 East Connector
  - State Road 25 (HHH) at County Road 700 North
  - State Road 25 (HHH) over County Road 900 North
  - State Road 25 (HHH) at SR 25 Connector (East)
  - SR 25 Connector (East) at Old State Road 25
  - State Road 25 (HHH) over County Road 1100 East

Appendix ..... Section 2

- Traffic Growth Factors
- Seasonal Adjustment Factor
- Axle Adjustment Factor Derivation
- AADT, AM Peak Hour, PM Peak Hour & Commercial Vehicle Percentage Derivation
- Turning Movement Computations
- Final Volume and Percentage Computations

EXECUTIVE SUMMARY

The following report provides average annual daily traffic (AADT), design hour volume (DHV), and the percentage of commercial vehicles along with the turning movement volumes for intersections along State Road 25, from Interstate 65 to the Carroll County line. These traffic forecasts are developed for new road construction that is part of the Hoosier Heartland Highway (HHH) project connecting Lafayette and Fort Wayne. The forecasted intersections are located between in northeastern Tippecanoe County. The adjacent land use is a mix of agricultural, residential and wooded uses.

The growth rate is based on the one is used in the Engineers Report dated December 2003. In addition to the growth rates, the report also generated traffic projected volumes for 2030 at various segments and at major intersections. The annual growth rate from the Engineers Report is 1.25 percent. Using this rate (0.0125) and 2006 as a base year, the growth factors for the horizon years 2010, 2015, 2020, and 2030 are 1.050, 1.113, 1.175, and 1.300.

The forecasted traffic volumes west of the western connection with old State Road 25 were increased appropriately to reflect the traffic volumes on old State Road 25. The affected intersections are the Interstate 65 northbound and southbound ramps.

Turning movement counts were provided in both the Engineers Report and by INDOT. Turning movement volumes for AADT, AM-DHV, and PM-DHV were calculated using turning movement propensity modeling software TMOVES. The commercial vehicle percentages for the AADT, AM design hour and PM design hour are inferred from the percentages calculated from the machine classification counts.

TRAFFIC VOLUME FORECAST FOR INTERSECTIONS

Date: Nov-06
Project: Des. No. 9802920
Route: SR 25 (HHH) at I-65 SB Ramps
County: Tippecanoe County
Other Info: AM-DHV

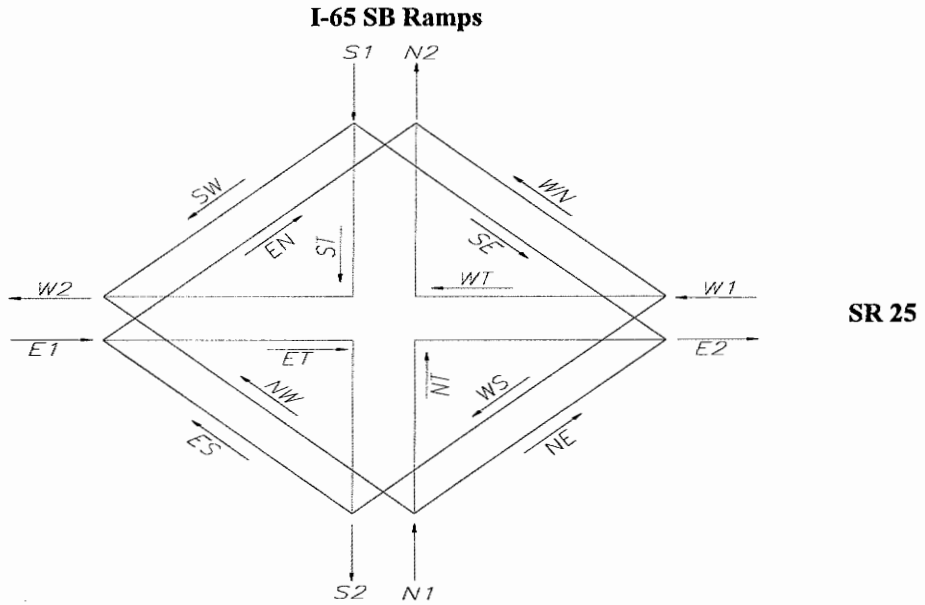

Turning Movements	AADT 2006	2010	2015	2020	2030	DHV %	COMMERCIAL VEHICLES % AADT	% DHV
NE								
NW								
NT								
SE	550	580	610	650	720	15	16	20
SW	1190	1250	1320	1400	1550	9	8	11
ST	10	10	10	10	10	10	10	11
ES	3470	3640	3860	4080	4510	9	5	9
EN								
ET	8760	9200	9750	10290	11390	8	19	18
WN								
WS	3030	3180	3370	3560	3940	11	9	8
WT	11040	11590	12280	12970	14350	12	14	15
N1								
S2	6510	6830	7240	7650	8460	10	7	9
S1	1750	1840	1940	2060	2280	11	10	14
N2								
E1	12230	12840	13610	14370	15900	8	15	15
W2	12230	12840	13600	14370	15900	12	13	15
W1	14070	14770	15650	16530	18290	12	13	13
E2	9310	9780	10360	10940	12110	9	19	18

TRAFFIC VOLUME FORECAST FOR INTERSECTIONS

Date: Nov-06
Project: Des. No. 9802920
Route: SR 25 (HHH) at I-65 SB Ramps
County: Tippecanoe County
Other Info: PM-DHV

I-65 SB Ramps

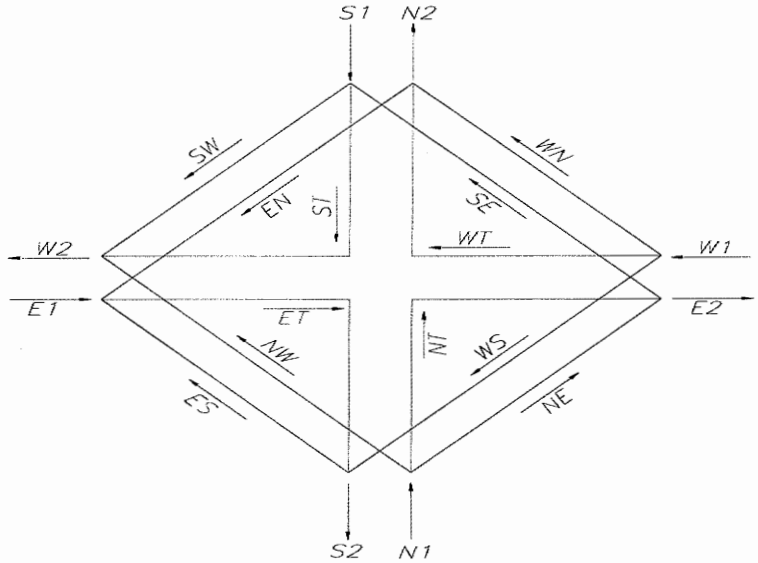

SR 25

Turning Movements	AADT 2006	2010	2015	2020	2030	DHV %	COMMERCIAL VEHICLES % AADT	% DHV
NE								
NW								
NT								
SE	550	580	610	650	720	5	16	14
SW	1190	1250	1320	1400	1550	11	8	4
ST	10	10	10	10	10	10	10	10
ES	3470	3640	3860	4080	4510	11	5	5
EN								
ET	8760	9200	9750	10290	11390	12	19	15
WN								
WS	3030	3180	3370	3560	3940	10	9	11
WT	11040	11590	12280	12970	14350	8	14	12
N1								
S2	6510	6830	7240	7650	8460	10	7	8
S1	1750	1840	1940	2060	2280	9	10	7
N2								
E1	12230	12840	13610	14370	15900	12	15	12
W2	12230	12840	13600	14370	15900	8	13	11
W1	14070	14770	15650	16530	18290	8	13	12
E2	9310	9780	10360	10940	12110	12	19	15

TRAFFIC VOLUME FORECAST FOR INTERSECTIONS

Date: Nov-06
Project: Des. No. 9802920
Route: SR 25 (HHH) at I-65 NB Ramps
County: Tippecanoe County
Other Info: AM-DHV

I-65 NB Ramps

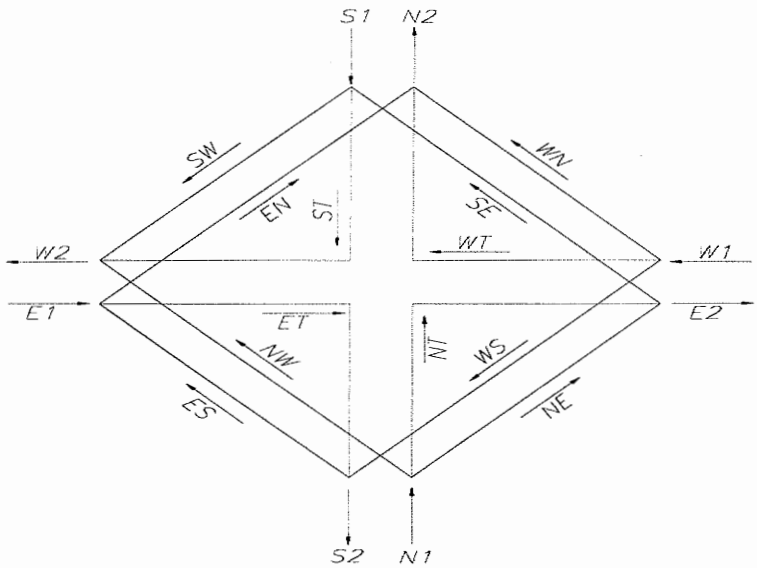

SR 25

Turning Movements	AADT 2006	2010	2015	2020	2030	DHV %	COMMERCIAL VEHICLES % AADT	% DHV
NE	3030	3180	3370	3560	3940	8	13	22
NW	3470	3640	3860	4080	4510	11	7	8
NT	10	10	10	10	10	10	10	11
SE								
SW								
ST								
ES								
EN	1190	1250	1320	1400	1550	11	9	15
ET	8120	8530	9030	9540	10560	8	18	19
WN	550	580	610	650	720	5	9	8
WS								
WT	10600	11130	11790	12460	13780	12	14	15
N1	6510	6830	7240	7650	8460	9	10	15
S2								
S1								
N2	1750	1840	1940	2060	2280	9	9	13
E1	9310	9780	10350	10940	12110	9	17	18
W2	14070	14770	15650	16540	18290	12	12	13
W1	11150	11710	12400	13110	14500	12	14	15
E2	11150	11710	12400	13100	14500	8	17	20

TRAFFIC VOLUME FORECAST FOR INTERSECTIONS

Date: Nov-06
Project: Des. No. 9802920
Route: SR 25 (HHH) at I-65 NB Ramps
County: Tippecanoe County
Other Info: PM-DHV

I-65 NB Ramps

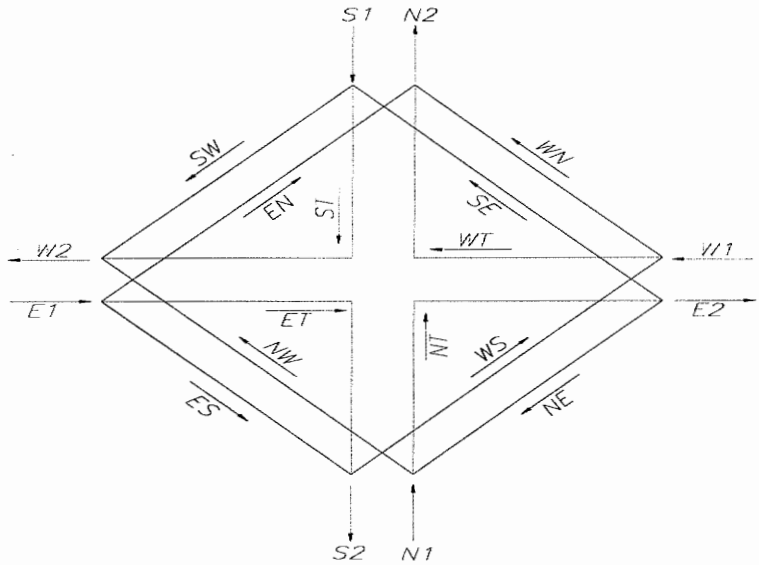

SR 25

Turning Movements	AADT 2006	AADT 2010	AADT 2015	AADT 2020	AADT 2030	DHV %	COMMERCIAL VEHICLES % AADT	COMMERCIAL VEHICLES % DHV
NE	3030	3180	3370	3560	3940	12	13	9
NW	3470	3640	3860	4080	4510	9	7	7
NT	10	10	10	10	10	10	10	10
SE								
SW								
ST								
ES								
EN	1190	1250	1320	1400	1550	9	9	6
ET	8120	8530	9030	9540	10560	12	18	15
WN	550	580	610	650	720	15	9	9
WS								
WT	10600	11130	11790	12460	13780	8	14	12
N1	6510	6830	7240	7650	8460	11	10	8
S2								
S1								
N2	1750	1840	1940	2060	2280	11	9	7
E1	9310	9780	10350	10940	12110	12	17	14
W2	14070	14770	15650	16540	18290	8	12	11
W1	11150	11710	12400	13110	14500	8	14	12
E2	11150	11710	12400	13100	14500	12	17	13

TRAFFIC VOLUME FORECAST FOR INTERSECTIONS

Date: Nov-06
Project: Des. No. 9802920
Route: HHH at SR 25 Connector (West)
County: Tippecanoe County
Other Info: AM-DHV

SR 25 Connector

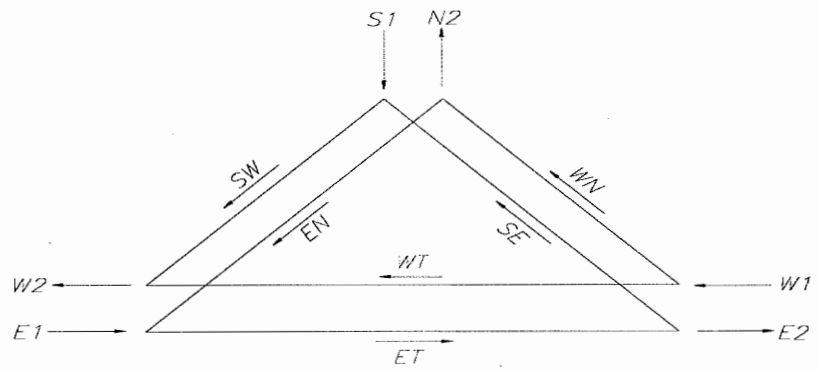

HHH

Turning Movements	AADT 2006	2010	2015	2020	2030	DHV %	COMMERCIAL VEHICLES % AADT	% DHV
NE								
NW								
NT								
SE	580	610	650	680	750	9	7	8
SW	3080	3230	3430	3620	4000	12	6	7
ST								
ES								
EN	3080	3230	3430	3620	4000	8	6	7
ET	8080	8480	8990	9490	10500	8	18	15
WN	580	610	650	680	750	10	7	8
WS								
WT	8080	8480	8990	9490	10500	12	15	12
N1								
S2								
S1	3660	3840	4080	4300	4750	11	6	7
N2	3660	3840	4080	4300	4750	8	6	7
E1	11160	11710	12420	13110	14500	8	15	13
W2	11160	11710	12420	13110	14500	12	13	11
W1	8660	9090	9640	10170	11250	12	14	12
E2	8660	9090	9640	10170	11250	8	17	15

TRAFFIC VOLUME FORECAST FOR INTERSECTIONS

Date: Nov-06
Project: Des. No. 9802920
Route: HHH at SR 25 Connector (West)
County: Tippecanoe County
Other Info: PM-DHV

SR 25 Connector

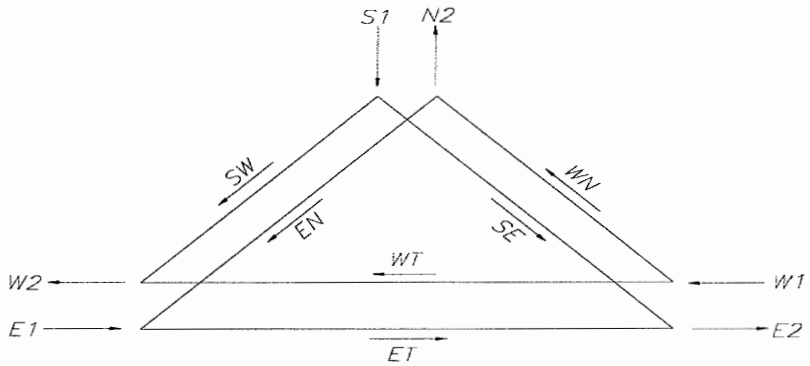

HHH

Turning Movements	AADT 2006	2010	2015	2020	2030	DHV %	COMMERCIAL VEHICLES % AADT	% DHV
NE								
NW								
NT								
SE	580	610	650	680	750	17	7	7
SW	3080	3230	3430	3620	4000	9	6	6
ST								
ES								
EN	3080	3230	3430	3620	4000	13	6	6
ET	8080	8480	8990	9490	10500	12	18	16
WN	580	610	650	680	750	16	7	7
WS								
WT	8080	8480	8990	9490	10500	7	15	16
N1								
S2								
S1	3660	3840	4080	4300	4750	11	6	6
N2	3660	3840	4080	4300	4750	13	6	6
E1	11160	11710	12420	13110	14500	12	15	13
W2	11160	11710	12420	13110	14500	8	13	13
W1	8660	9090	9640	10170	11250	8	14	15
E2	8660	9090	9640	10170	11250	12	17	15

TRAFFIC VOLUME FORECAST FOR INTERSECTIONS

Date: Nov-06
Project: Des. No. 9802920
Route: CR 300N at LSR (CR 400E)
County: Tippecanoe County
Other Info: AM-DHV

CR 300N

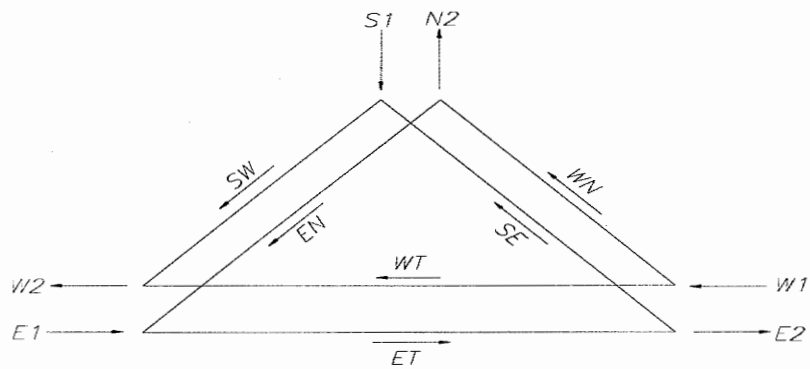

LSR

Turning Movements	AADT 2006	2010	2015	2020	2030	DHV %	COMMERCIAL VEHICLES % AADT	% DHV
NE								
NW								
NT								
SE	890	930	990	1050	1160	8	5	6
SW	1500	1580	1670	1760	1950	8	5	6
ST								
ES								
EN	1500	1580	1670	1760	1950	12	5	6
ET	390	410	430	460	510	8	6	7
WN	890	930	990	1050	1160	12	5	6
WS								
WT	390	410	430	460	510	12	6	7
N1								
S2								
S1	2390	2510	2660	2810	3110	8	5	6
N2	2390	2510	2660	2810	3110	12	5	6
E1	1890	1990	2100	2220	2460	11	5	6
W2	1890	1990	2100	2220	2460	9	5	6
W1	1280	1340	1420	1510	1670	12	5	6
E2	1280	1340	1420	1510	1670	8	5	6

TRAFFIC VOLUME FORECAST FOR INTERSECTIONS

Date: Nov-06
Project: Des. No. 9802920
Route: CR 300N at LSR (CR 400E)
County: Tippecanoe County
Other Info: PM-DHV

CR 300N

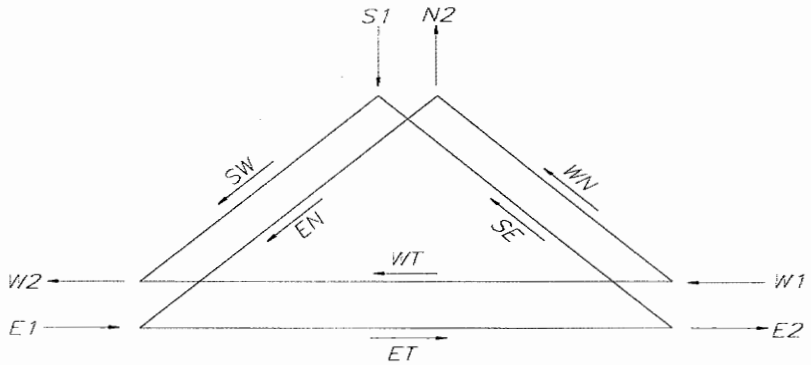

LSR

Turning Movements	AADT 2006	2010	2015	2020	2030	DHV %	COMMERCIAL VEHICLES % AADT	% DHV
NE								
NW								
NT								
SE	890	930	990	1050	1160	12	5	5
SW	1500	1580	1670	1760	1950	12	5	5
ST								
ES								
EN	1500	1580	1670	1760	1950	8	5	5
ET	390	410	430	460	510	12	6	6
WN	890	930	990	1050	1160	8	5	5
WS								
WT	390	410	430	460	510	8	6	6
N1								
S2								
S1	2390	2510	2660	2810	3110	12	5	5
N2	2390	2510	2660	2810	3110	8	5	5
E1	1890	1990	2100	2220	2460	9	5	5
W2	1890	1990	2100	2220	2460	11	5	5
W1	1280	1340	1420	1510	1670	8	5	5
E2	1280	1340	1420	1510	1670	12	5	5

TRAFFIC VOLUME FORECAST FOR INTERSECTIONS

Date: Nov-06
Project: Des. No. 9802920
Route: HHH at CR 500E Connector
County: Tippecanoe County
Other Info: AM-DHV

CR 500E Connector

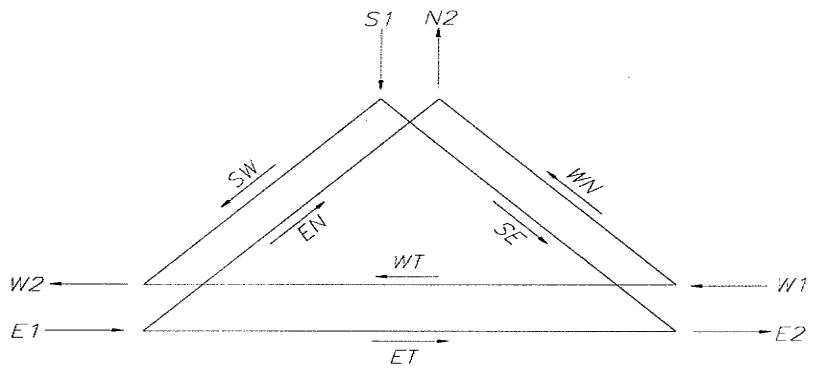

HHH

Turning Movements	AADT 2006	2010	2015	2020	2030	DHV %	COMMERCIAL VEHICLES % AADT	% DHV
NE								
NW								
NT								
SE	300	320	330	350	390	10	8	9
SW	1300	1370	1450	1530	1690	12	6	7
ST								
ES								
EN	1300	1370	1450	1530	1690	8	6	7
ET	7350	7720	8180	8640	9560	8	18	15
WN	300	320	330	350	390	10	8	9
WS								
WT	7350	7720	8180	8640	9560	12	15	12
N1								
S2								
S1	1600	1690	1780	1880	2080	12	6	7
N2	1600	1690	1780	1880	2080	9	6	7
E1	8650	9090	9630	10170	11250	8	16	14
W2	8650	9090	9630	10170	11250	12	14	11
W1	7650	8040	8510	8990	9950	12	15	12
E2	7650	8040	8510	8990	9950	8	18	15

TRAFFIC VOLUME FORECAST FOR INTERSECTIONS

Date: Nov-06
Project: Des. No. 9802920
Route: HHH at CR 500E Connector
County: Tippecanoe County
Other Info: PM-DHV

CR 500E Connector

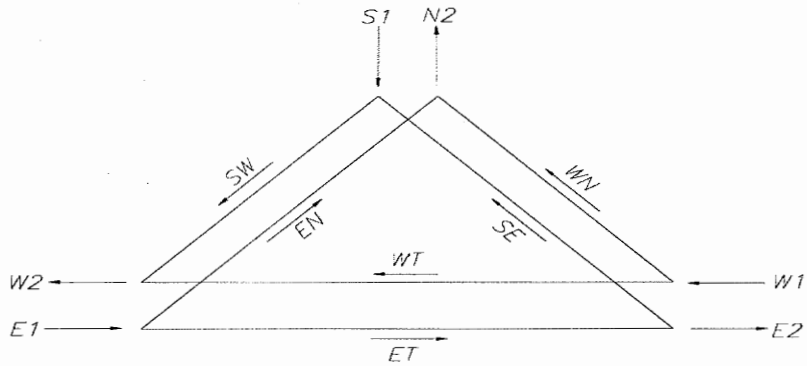

HHH

Turning Movements	AADT 2006	2010	2015	2020	2030	DHV %	COMMERCIAL VEHICLES % AADT	% DHV
NE								
NW								
NT								
SE	300	320	330	350	390	10	8	8
SW	1300	1370	1450	1530	1690	8	6	6
ST								
ES								
EN	1300	1370	1450	1530	1690	12	6	6
ET	7350	7720	8180	8640	9560	12	18	16
WN	300	320	330	350	390	10	8	8
WS								
WT	7350	7720	8180	8640	9560	8	15	14
N1								
S2								
S1	1600	1690	1780	1880	2080	9	6	6
N2	1600	1690	1780	1880	2080	12	6	6
E1	8650	9090	9630	10170	11250	12	16	14
W2	8650	9090	9630	10170	11250	8	14	13
W1	7650	8040	8510	8990	9950	8	15	14
E2	7650	8040	8510	8990	9950	12	18	16

TRAFFIC VOLUME FORECAST FOR INTERSECTIONS

Date: Nov-06
Project: Des. No. 9802920
Route: CR 500E at CR 500E Connector
County: Tippecanoe County
Other Info: AM-DHV

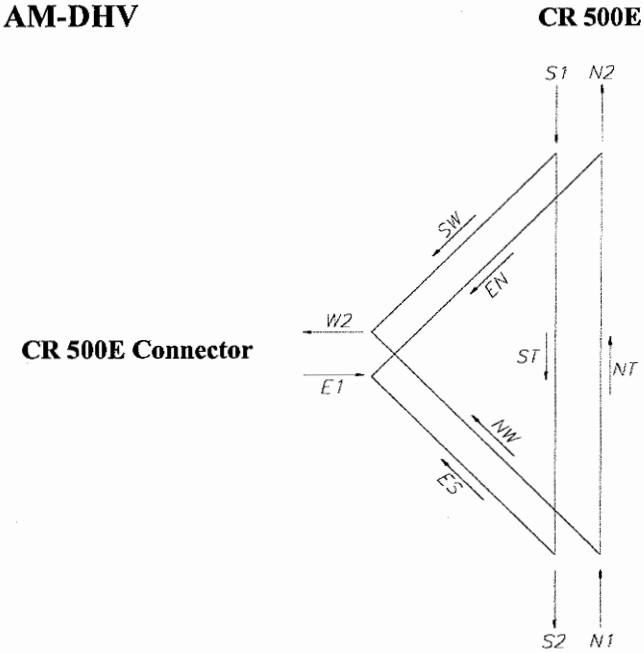

Turning Movements	AADT 2006	AADT 2010	AADT 2015	AADT 2020	AADT 2030	DHV %	COMMERCIAL VEHICLES % AADT	COMMERCIAL VEHICLES % DHV
NE								
NW	1140	1200	1270	1340	1480	11	7	8
NT	270	280	300	320	350	6	8	9
SE								
SW	460	480	510	540	600	12	7	8
ST	270	280	300	320	350	14	8	9
ES	1140	1200	1270	1340	1480	9	7	8
EN	460	480	510	540	600	8	7	8
ET								
WN								
WS								
WT								
N1	1410	1480	1570	1660	1830	10	7	8
S2	1410	1480	1570	1660	1830	10	7	8
S1	730	760	810	860	950	13	7	8
N2	730	760	810	860	950	7	7	8
E1	1600	1680	1780	1880	2080	9	7	8
W2	1600	1680	1780	1880	2080	12	7	8
W1								
E2								

TRAFFIC VOLUME FORECAST FOR INTERSECTIONS

Date: Nov-06
Project: Des. No. 9802920
Route: CR 500E at CR 500E Connector
County: Tippecanoe County
Other Info: PM-DHV

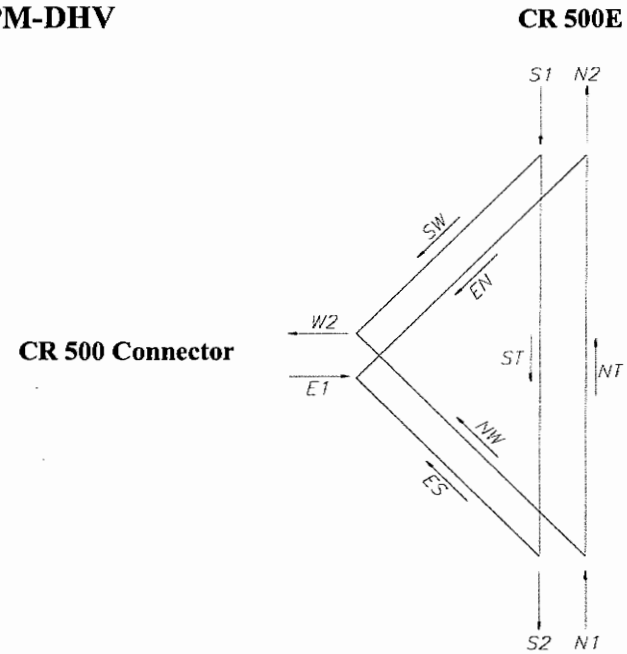

Turning Movements	AADT 2006	2010	2015	2020	2030	DHV %	COMMERCIAL VEHICLES % AADT	% DHV
NE								
NW	1140	1200	1270	1340	1480	9	7	7
NT	270	280	300	320	350	14	8	8
SE								
SW	460	480	510	540	600	8	7	7
ST	270	280	300	320	350	6	8	8
ES	1140	1200	1270	1340	1480	11	7	7
EN	460	480	510	540	600	12	7	7
ET								
WN								
WS								
WT								
N1	1410	1480	1570	1660	1830	10	7	7
S2	1410	1480	1570	1660	1830	10	7	7
S1	730	760	810	860	950	7	7	7
N2	730	760	810	860	950	13	7	7
E1	1600	1680	1780	1880	2080	12	7	7
W2	1600	1680	1780	1880	2080	9	7	7
W1								
E2								

TRAFFIC VOLUME FORECAST FOR INTERSECTIONS

Date: Nov-06
Project: Des. No. 9802920
Route: CR 625E over HHH
County: Tippecanoe County
Other Info: AM-DHV

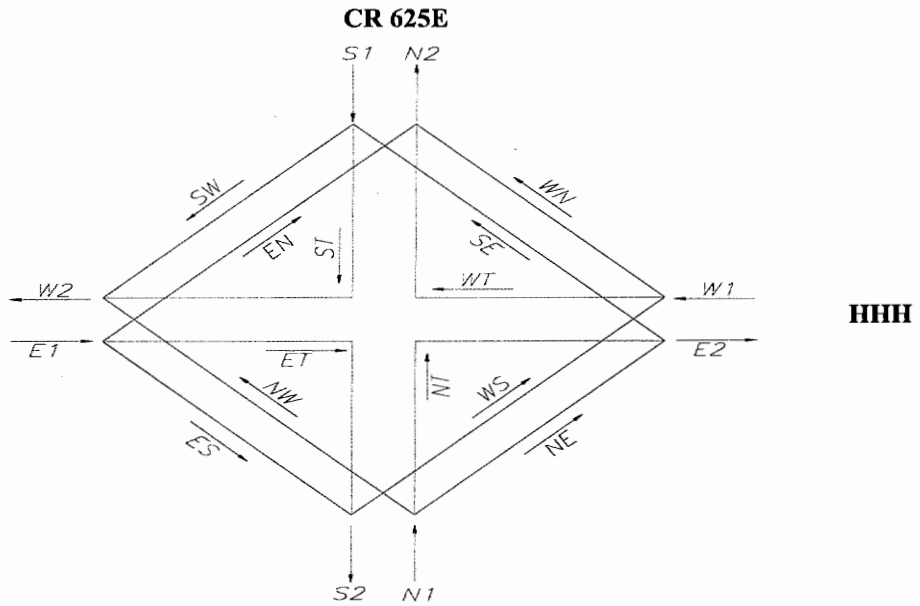

Turning Movements	AADT 2006	2010	2015	2020	2030	DHV %	COMMERCIAL VEHICLES % AADT	% DHV
NE								
NW								
NT	100	110	110	120	130	10	9	10
SE								
SW								
ST	100	110	110	120	130	10	9	10
ES								
EN								
ET	7650	8030	8510	8990	9950	8	18	15
WN								
WS								
WT	7650	8030	8510	8990	9950	12	15	12
N1	100	110	110	120	130	10	9	10
S2	100	110	110	120	130	10	9	10
S1	100	110	110	120	130	10	9	10
N2	100	110	110	120	130	10	9	10
E1	7650	8030	8510	8990	9950	8	18	15
W2	7650	8030	8510	8990	9950	12	15	12
W1	7650	8030	8510	8990	9950	12	15	12
E2	7650	8030	8510	8990	9950	8	18	15

TRAFFIC VOLUME FORECAST FOR INTERSECTIONS

Date: Nov-06
Project: Des. No. 9802920
Route: CR 625E over HHH
County: Tippecanoe County
Other Info: PM-DHV

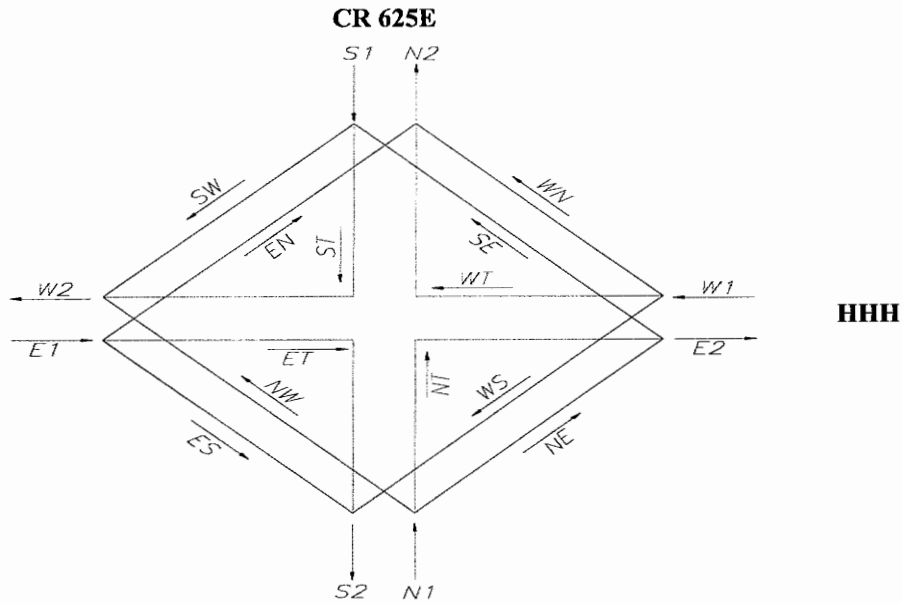

Turning Movements	AADT 2006	2010	2015	2020	2030	DHV %	COMMERCIAL VEHICLES % AADT	% DHV
NE								
NW								
NT	100	110	110	120	130	10	9	9
SE								
SW								
ST	100	110	110	120	130	10	9	9
ES								
EN								
ET	7650	8030	8510	8990	9950	12	18	14
WN								
WS								
WT	7650	8030	8510	8990	9950	8	15	14
N1	100	110	110	120	130	10	9	9
S2	100	110	110	120	130	10	9	9
S1	100	110	110	120	130	10	9	9
N2	100	110	110	120	130	10	9	9
E1	7650	8030	8510	8990	9950	12	18	14
W2	7650	8030	8510	8990	9950	8	15	14
W1	7650	8030	8510	8990	9950	8	15	14
E2	7650	8030	8510	8990	9950	12	18	14

TRAFFIC VOLUME FORECAST FOR INTERSECTIONS

Date: Nov-06
Project: Des. No. 9802920
Route: HHH at CR 450N
County: Tippecanoe County
Other Info: AM-DHV

HHH

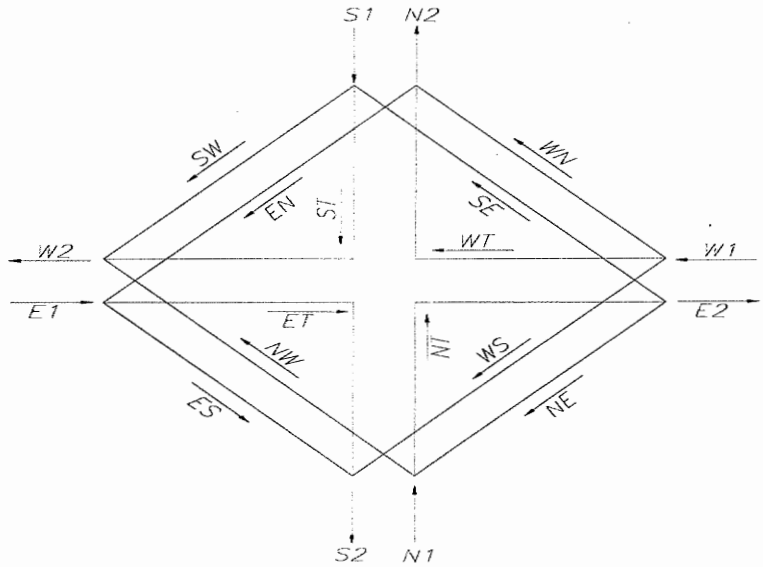

CR 450N

Turning Movements	AADT 2006	2010	2015	2020	2030	DHV %	COMMERCIAL VEHICLES % AADT	% DHV
NE	890	930	990	1050	1160	9	6	7
NW	130	140	140	150	170	9	8	9
NT	6630	6960	7380	7790	8620	8	18	15
SE	230	240	260	270	300	10	8	9
SW	100	110	110	120	130	15	6	7
ST	6630	6960	7380	7790	8620	12	15	12
ES	130	140	140	150	170	12	6	7
EN	100	110	110	120	130	4	8	9
ET	40	40	40	50	50	10	7	8
WN	230	240	260	270	300	10	8	9
WS	890	930	990	1050	1160	11	6	7
WT	40	40	40	50	50	10	7	8
N1	7650	8030	8510	8990	9950	8	16	14
S2	7650	8030	8510	8990	9950	12	14	11
S1	6960	7310	7750	8180	9050	12	15	12
N2	6960	7310	7750	8180	9050	8	18	15
E1	270	290	290	320	350	9	7	8
W2	270	290	290	320	350	11	7	8
W1	1160	1210	1290	1370	1510	11	6	7
E2	1160	1210	1290	1370	1510	9	6	7

TRAFFIC VOLUME FORECAST FOR INTERSECTIONS

Date: Nov-06
Project: Des. No. 9802920
Route: HHH at CR 450N
County: Tippecanoe County
Other Info: PM-DHV

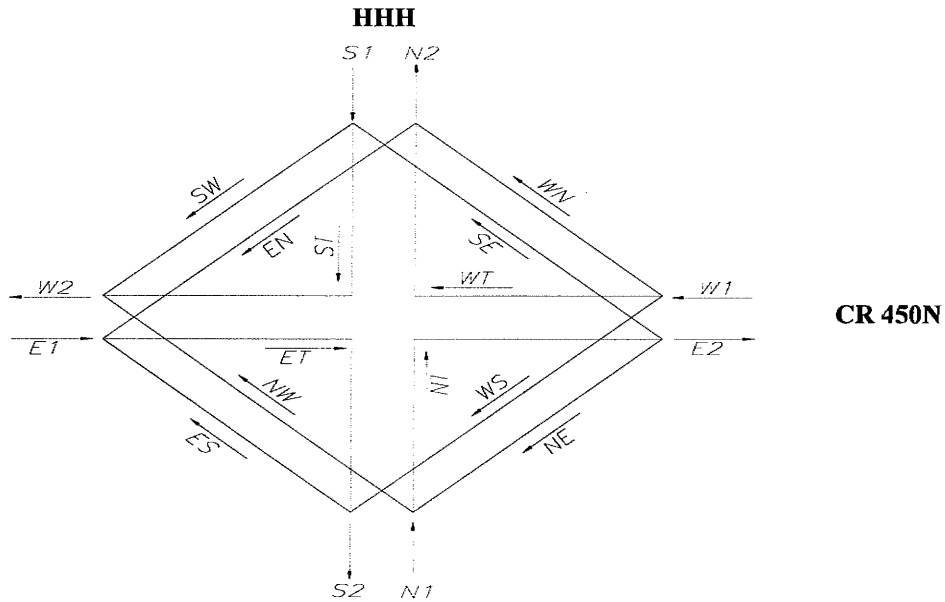

Turning Movements	AADT 2006	2010	2015	2020	2030	DHV %	COMMERCIAL VEHICLES % AADT	% DHV
NE	890	930	990	1050	1160	11	6	6
NW	130	140	140	150	170	12	8	8
NT	6630	6960	7380	7790	8620	12	18	16
SE	230	240	260	270	300	10	8	8
SW	100	110	110	120	130	4	6	6
ST	6630	6960	7380	7790	8620	8	15	14
ES	130	140	140	150	170	9	6	6
EN	100	110	110	120	130	15	8	8
ET	40	40	40	50	50	10	7	7
WN	230	240	260	270	300	10	8	8
WS	890	930	990	1050	1160	9	6	6
WT	40	40	40	50	50	10	7	7
N1	7650	8030	8510	8990	9950	12	16	15
S2	7650	8030	8510	8990	9950	8	14	13
S1	6960	7310	7750	8180	9050	8	15	14
N2	6960	7310	7750	8180	9050	12	18	16
E1	270	290	290	320	350	11	7	7
W2	270	290	290	320	350	9	7	7
W1	1160	1210	1290	1370	1510	9	6	6
E2	1160	1210	1290	1370	1510	11	6	6

TRAFFIC VOLUME FORECAST FOR INTERSECTIONS

Date: Nov-06
Project: Des. No. 9802920
Route: HHH at CR 750E
County: Tippecanoe County
Other Info: AM-DHV

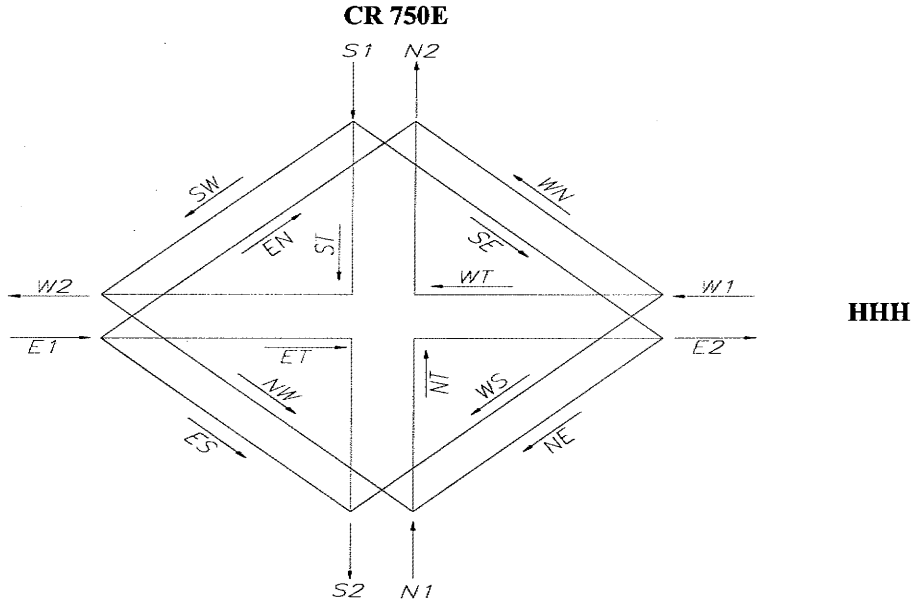

Turning Movements	AADT 2006	2010	2015	2020	2030	DHV %	COMMERCIAL VEHICLES % AADT	% DHV
NE	190	200	210	220	250	12	8	9
NW	620	650	690	730	810	12	6	7
NT	150	160	170	180	200	10	8	9
SE	120	130	130	140	160	7	6	7
SW	270	280	300	320	350	9	8	9
ST	150	160	170	180	200	10	8	9
ES	620	650	690	730	810	7	6	7
EN	270	280	300	320	350	11	8	9
ET	6070	6370	6750	7130	7890	8	18	15
WN	120	130	130	140	160	13	8	9
WS	190	200	210	220	250	8	6	7
WT	6070	6370	6750	7130	7890	12	15	12
N1	960	1010	1070	1130	1260	12	7	8
S2	960	1010	1070	1130	1260	8	6	7
S1	540	570	600	640	710	9	8	9
N2	540	570	600	640	710	11	8	9
E1	6960	7300	7740	8180	9050	8	17	14
W2	6960	7300	7740	8180	9050	12	14	11
W1	6380	6700	7090	7490	8300	12	15	12
E2	6380	6700	7090	7490	8300	8	17	15

TRAFFIC VOLUME FORECAST FOR INTERSECTIONS

Date: Nov-06
Project: Des. No. 9802920
Route: HHH at CR 750E
County: Tippecanoe County
Other Info: PM-DHV

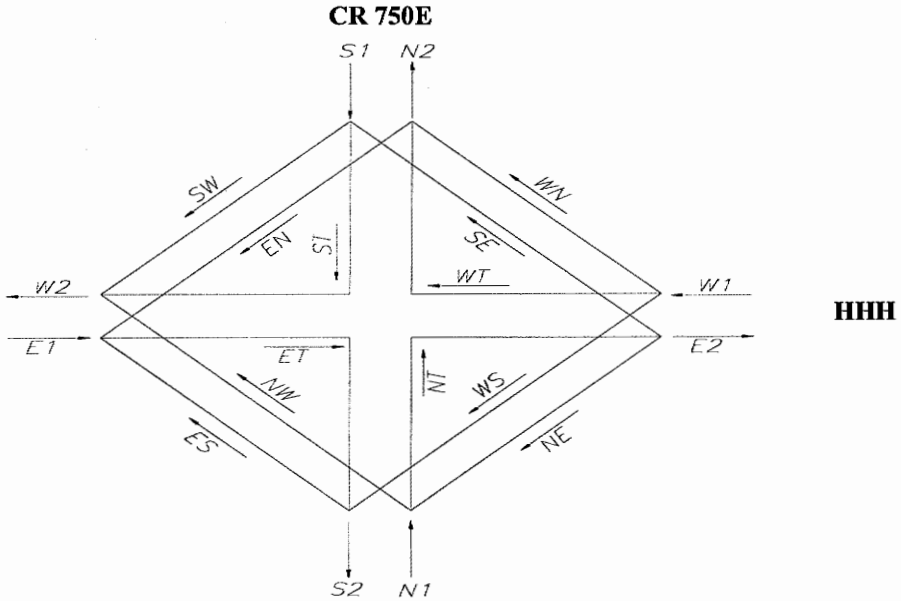

Turning Movements	AADT 2006	2010	2015	2020	2030	DHV %	COMMERCIAL VEHICLES % AADT	% DHV
NE	190	200	210	220	250	8	8	8
NW	620	650	690	730	810	7	6	6
NT	150	160	170	180	200	10	8	8
SE	120	130	130	140	160	13	6	6
SW	270	280	300	320	350	11	8	8
ST	150	160	170	180	200	10	8	8
ES	620	650	690	730	810	12	6	6
EN	270	280	300	320	350	9	8	8
ET	6070	6370	6750	7130	7890	12	18	12
WN	120	130	130	140	160	7	8	8
WS	190	200	210	220	250	12	6	6
WT	6070	6370	6750	7130	7890	8	15	14
N1	960	1010	1070	1130	1260	8	7	7
S2	960	1010	1070	1130	1260	12	6	6
S1	540	570	600	640	710	11	8	8
N2	540	570	600	640	710	9	8	8
E1	6960	7300	7740	8180	9050	12	17	11
W2	6960	7300	7740	8180	9050	8	14	13
W1	6380	6700	7090	7490	8300	8	15	14
E2	6380	6700	7090	7490	8300	12	17	12

TRAFFIC VOLUME FORECAST FOR INTERSECTIONS

Date: Nov-06
Project: Des. No. 9802920
Route: HHH at CR 900E Connector
County: Tippecanoe County
Other Info: AM-DHV

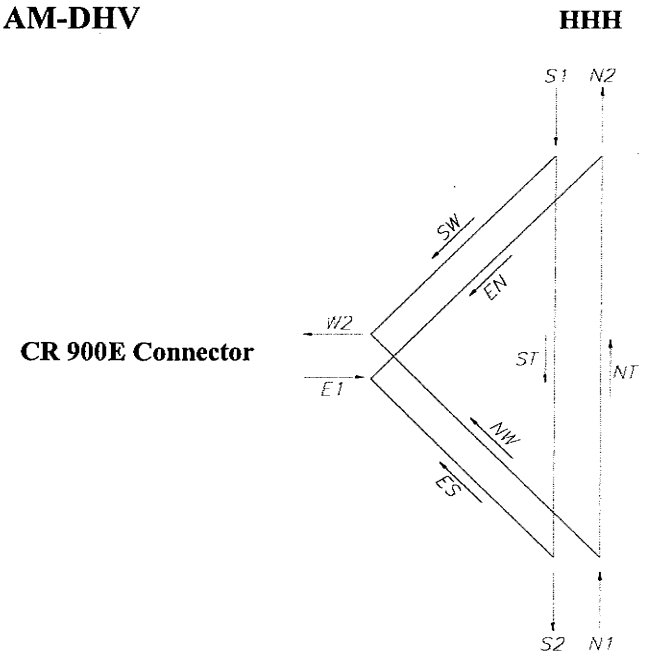

Turning Movements	AADT 2006	2010	2015	2020	2030	DHV %	COMMERCIAL VEHICLES % AADT	% DHV
NE								
NW	890	930	990	1050	1160	9	7	8
NT	5500	5780	6120	6460	7150	8	18	15
SE								
SW	310	330	340	360	400	10	7	8
ST	5500	5780	6120	6460	7150	12	15	12
ES	890	930	990	1050	1160	11	7	8
EN	310	330	340	360	400	10	7	8
ET								
WN								
WS								
WT								
N1	6390	6710	7110	7510	8310	8	16	14
S2	6390	6710	7110	7510	8310	12	14	11
S1	5810	6110	6460	6820	7550	12	15	12
N2	5810	6110	6460	6820	7550	8	17	15
E1	1200	1260	1330	1410	1560	11	7	8
W2	1200	1260	1330	1410	1560	9	7	8
W1								
E2								

TRAFFIC VOLUME FORECAST FOR INTERSECTIONS

Date: Nov-06
Project: Des. No. 9802920
Route: HHH at CR 900E Connector
County: Tippecanoe County
Other Info: PM-DHV

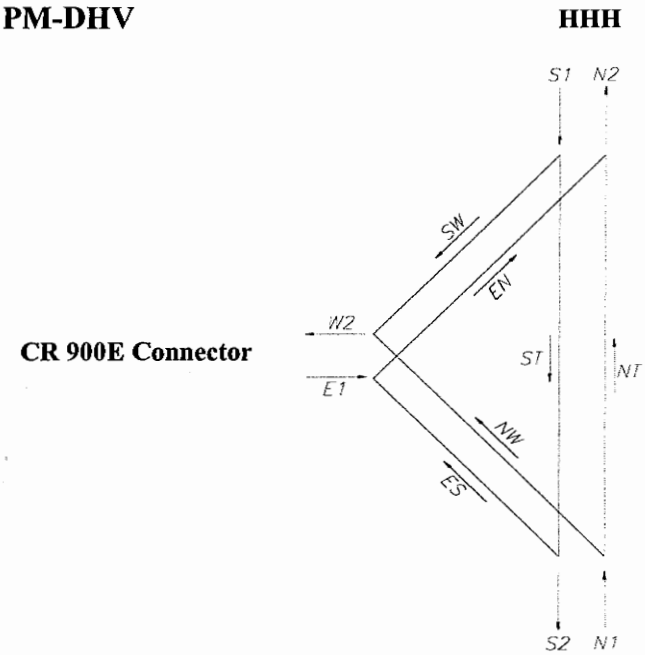

Turning Movements	AADT 2006	AADT 2010	AADT 2015	AADT 2020	AADT 2030	DHV %	COMMERCIAL VEHICLES % AADT	COMMERCIAL VEHICLES % DHV
NE								
NW	890	930	990	1050	1160	11	7	7
NT	5500	5780	6120	6460	7150	12	18	16
SE								
SW	310	330	340	360	400	10	7	7
ST	5500	5780	6120	6460	7150	8	15	14
ES	890	930	990	1050	1160	9	7	7
EN	310	330	340	360	400	10	7	7
ET								
WN								
WS								
WT								
N1	6390	6710	7110	7510	8310	12	16	15
S2	6390	6710	7110	7510	8310	8	14	13
S1	5810	6110	6460	6820	7550	8	15	14
N2	5810	6110	6460	6820	7550	12	17	16
E1	1200	1260	1330	1410	1560	9	7	7
W2	1200	1260	1330	1410	1560	11	7	7
W1								
E2								

TRAFFIC VOLUME FORECAST FOR INTERSECTIONS

Date: Nov-06
Project: Des. No. 9802920
Route: CR 900E at CR 900E Connector
County: Tippecanoe County
Other Info: AM-DHV

CR 900E

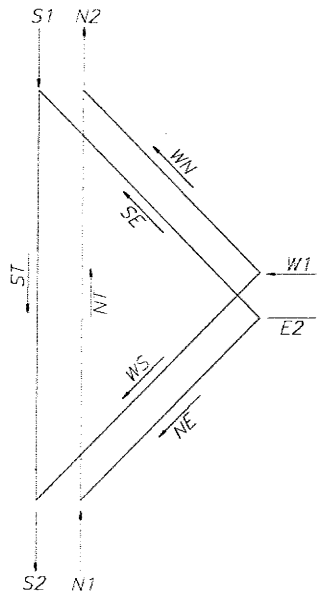

CR 900E Connector

Turning Movements	AADT 2006	2010	2015	2020	2030	DHV %	COMMERCIAL VEHICLES % AADT	% DHV
NE	690	720	770	810	900	11	7	8
NW								
NT	390	410	430	460	510	12	9	10
SE	510	540	570	600	660	11	7	8
SW								
ST	390	410	430	460	510	8	9	10
ES								
EN								
ET								
WN	510	540	570	600	660	9	7	8
WS	690	720	770	810	900	9	7	8
WT								
N1	1080	1130	1200	1270	1410	11	8	9
S2	1080	1130	1200	1270	1410	9	8	9
S1	900	950	1000	1060	1170	9	8	9
N2	900	950	1000	1060	1170	10	8	9
E1								
W2								
W1	1200	1260	1340	1410	1560	9	7	8
E2	1200	1260	1340	1410	1560	11	7	8

TRAFFIC VOLUME FORECAST FOR INTERSECTIONS

Date: Nov-06
Project: Des. No. 9802920
Route: CR 900E at CR 900E Connector
County: Tippecanoe County
Other Info: PM-DHV

CR 900E

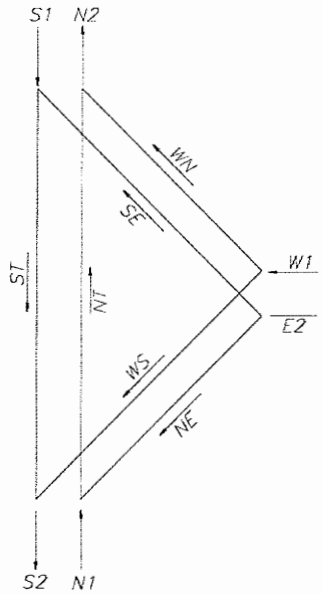

CR 900E Connector

Turning Movements	AADT 2006	2010	2015	2020	2030	DHV %	COMMERCIAL VEHICLES % AADT	% DHV
NE	690	720	770	810	900	9	7	7
NW								
NT	390	410	430	460	510	8	9	9
SE	510	540	570	600	660	9	7	7
SW								
ST	390	410	430	460	510	12	9	9
ES								
EN								
ET								
WN	510	540	570	600	660	11	7	7
WS	690	720	770	810	900	11	7	7
WT								
N1	1080	1130	1200	1270	1410	9	8	8
S2	1080	1130	1200	1270	1410	11	8	8
S1	900	950	1000	1060	1170	10	8	8
N2	900	950	1000	1060	1170	9	8	8
E1								
W2								
W1	1200	1260	1340	1410	1560	11	7	7
E2	1200	1260	1340	1410	1560	9	7	7

TRAFFIC VOLUME FORECAST FOR INTERSECTIONS

Date: Nov-06
Project: Des. No. 9802920
Route: HHH at CR 700N
County: Tippecanoe County
Other Info: AM-DHV

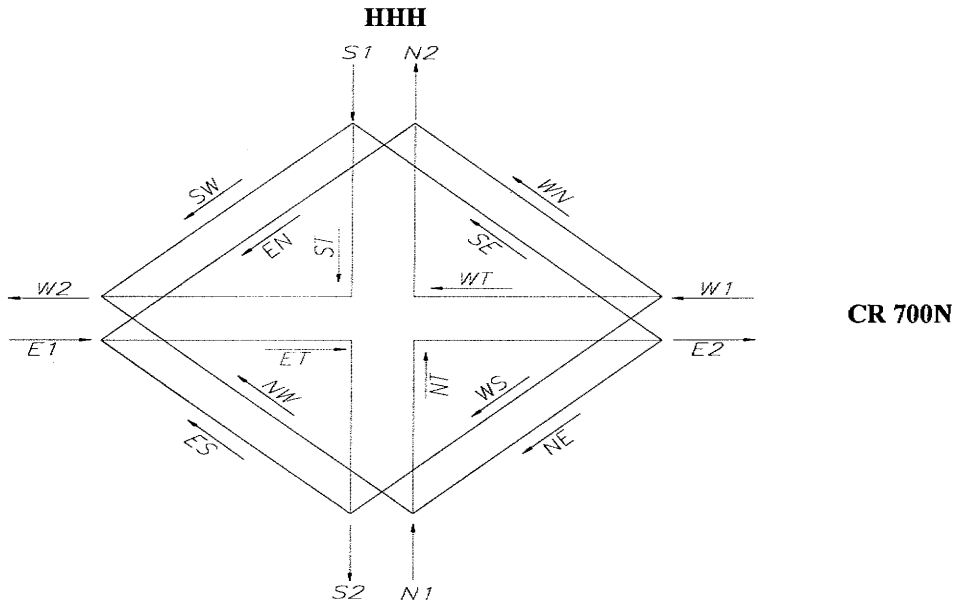

Turning Movements	AADT 2006	2010	2015	2020	2030	DHV %	COMMERCIAL VEHICLES % AADT	% DHV
NE	620	650	690	730	810	7	6	7
NW	220	230	240	260	290	10	8	9
NT	4960	5210	5520	5830	6450	8	18	15
SE	300	320	330	350	390	10	6	7
SW	120	130	130	140	160	13	8	9
ST	4960	5210	5520	5830	6450	12	15	12
ES	220	230	240	260	290	10	6	7
EN	120	130	130	140	160	7	8	9
ET	150	160	170	180	200	5	7	8
WN	300	320	330	350	390	10	8	9
WS	620	650	690	730	810	12	6	7
WT	150	160	170	180	200	15	7	8
N1	5800	6090	6450	6820	7550	8	16	14
S2	5800	6090	6450	6820	7550	12	14	11
S1	5380	5660	5980	6320	7000	12	14	12
N2	5380	5660	5980	6320	7000	8	17	15
E1	490	520	540	580	650	8	7	8
W2	490	520	540	580	650	12	8	9
W1	1070	1130	1190	1260	1400	12	7	8
E2	1070	1130	1190	1260	1400	8	6	7

TRAFFIC VOLUME FORECAST FOR INTERSECTIONS

Date: Nov-06
Project: Des. No. 9802920
Route: HHH at CR 700N
County: Tippecanoe County
Other Info: PM-DHV

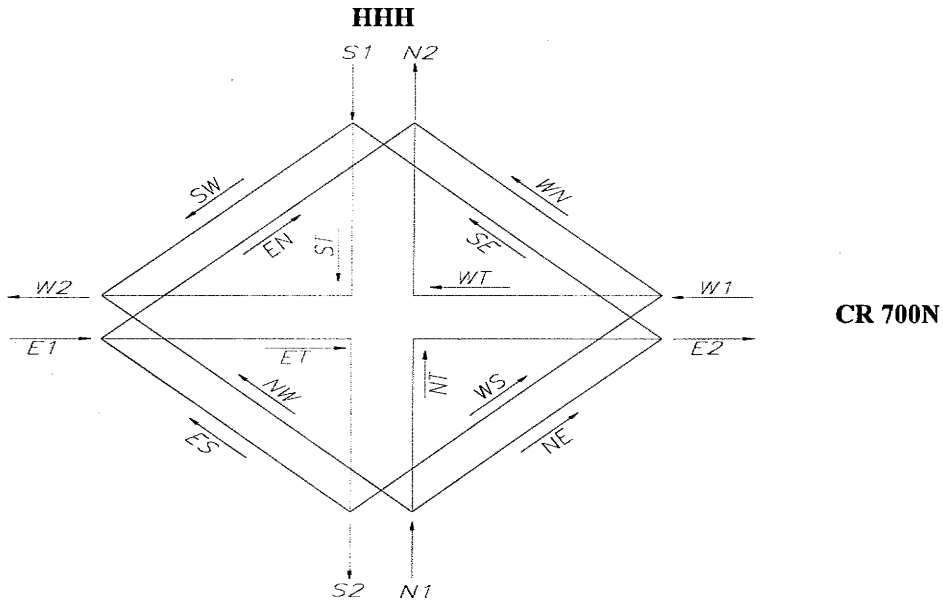

Turning Movements	AADT 2006	2010	2015	2020	2030	DHV %	COMMERCIAL VEHICLES % AADT	% DHV
NE	620	650	690	730	810	12	6	6
NW	220	230	240	260	290	10	8	8
NT	4960	5210	5520	5830	6450	12	18	16
SE	300	320	330	350	390	10	6	6
SW	120	130	130	140	160	7	8	8
ST	4960	5210	5520	5830	6450	8	15	14
ES	220	230	240	260	290	10	6	6
EN	120	130	130	140	160	13	8	8
ET	150	160	170	180	200	15	7	7
WN	300	320	330	350	390	10	8	8
WS	620	650	690	730	810	7	6	6
WT	150	160	170	180	200	5	7	7
N1	5800	6090	6450	6820	7550	12	16	15
S2	5800	6090	6450	6820	7550	8	14	13
S1	5380	5660	5980	6320	7000	8	14	13
N2	5380	5660	5980	6320	7000	12	17	15
E1	490	520	540	580	650	12	7	7
W2	490	520	540	580	650	8	8	8
W1	1070	1130	1190	1260	1400	8	7	7
E2	1070	1130	1190	1260	1400	12	6	6

TRAFFIC VOLUME FORECAST FOR INTERSECTIONS

Date: Nov-06
Project: Des. No. 9802920
Route: CR 1000E over HHH
County: Tippecanoe County
Other Info: AM-DHV

CR 1000E

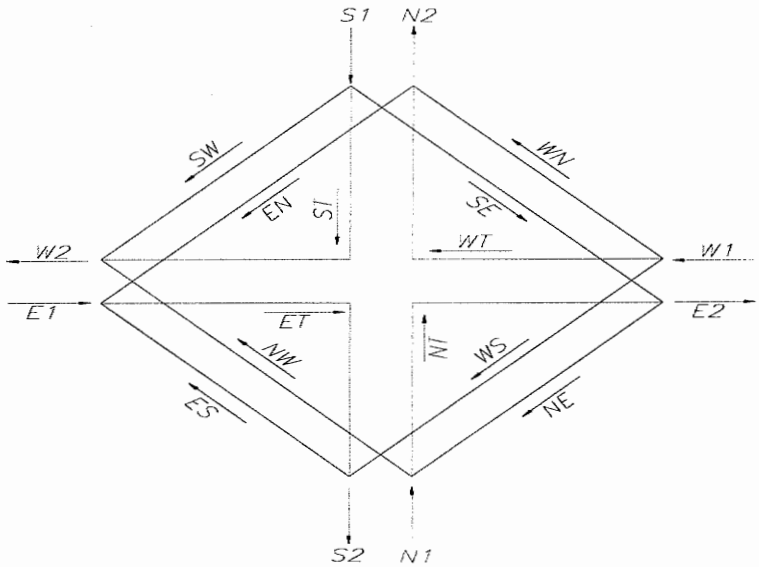

HHH

Turning Movements	AADT 2006	2010	2015	2020	2030	DHV %	COMMERCIAL VEHICLES % AADT	% DHV
NE								
NW								
NT	100	110	110	120	130	10	10	11
SE								
SW								
ST	100	110	110	120	130	10	10	11
ES								
EN								
ET	5390	5660	6000	6330	7010	8	18	15
WN								
WS								
WT	5390	5660	6000	6330	7010	12	15	12
N1	100	110	110	120	130	10	10	11
S2	100	110	110	120	130	10	10	11
S1	100	110	110	120	130	10	10	11
N2	100	110	110	120	130	10	10	11
E1	5390	5660	6000	6330	7010	8	18	15
W2	5390	5660	6000	6330	7010	12	15	12
W1	5390	5660	6000	6330	7010	12	15	12
E2	5390	5660	6000	6330	7010	8	18	15

TRAFFIC VOLUME FORECAST FOR INTERSECTIONS

Date: Nov-06
Project: Des. No. 9802920
Route: CR 1000E over HHH
County: Tippecanoe County
Other Info: PM-DHV

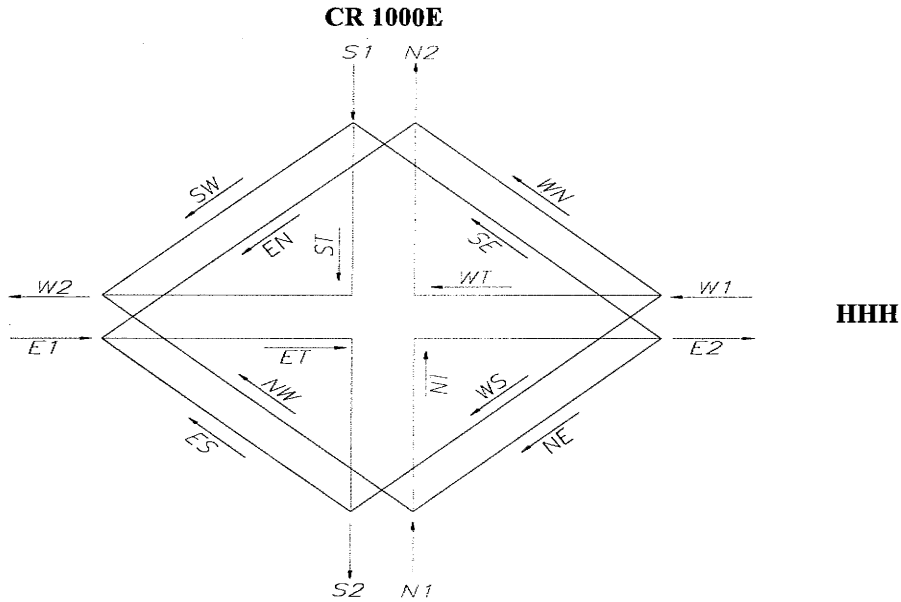

Turning Movements	AADT 2006	2010	2015	2020	2030	DHV %	COMMERCIAL VEHICLES % AADT	% DHV
NE								
NW								
NT	100	110	110	120	130	10	10	10
SE								
SW								
ST	100	110	110	120	130	10	10	10
ES								
EN								
ET	5390	5660	6000	6330	7010	12	18	16
WN								
WS								
WT	5390	5660	6000	6330	7010	8	15	14
N1	100	110	110	120	130	10	10	10
S2	100	110	110	120	130	10	10	10
S1	100	110	110	120	130	10	10	10
N2	100	110	110	120	130	10	10	10
E1	5390	5660	6000	6330	7010	12	18	16
W2	5390	5660	6000	6330	7010	8	15	14
W1	5390	5660	6000	6330	7010	8	15	14
E2	5390	5660	6000	6330	7010	12	18	16

TRAFFIC VOLUME FORECAST FOR INTERSECTIONS

Date: Nov-06
Project: Des. No. 9802920
Route: HHH over CR 900N
County: Tippecanoe County
Other Info: AM-DHV

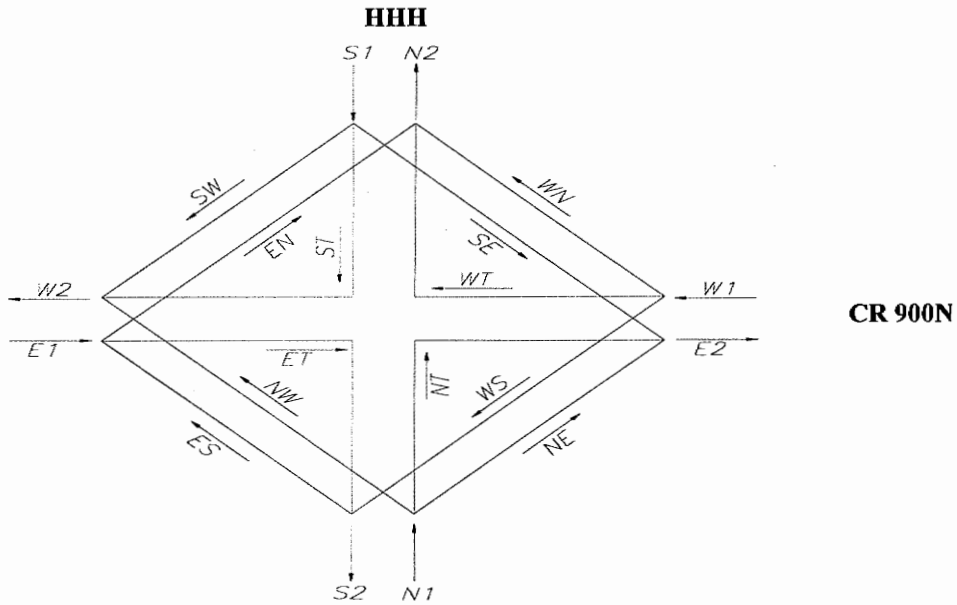

Turning Movements	AADT 2006	2010	2015	2020	2030	DHV %	COMMERCIAL VEHICLES % AADT	% DHV
NE								
NW								
NT	5390	5660	6000	6330	7010	8	18	15
SE								
SW								
ST	5390	5660	6000	6330	7010	12	15	12
ES								
EN								
ET	580	610	650	680	750	7	10	9
WN								
WS								
WT	580	610	650	680	750	13	10	9
N1	5390	5660	6000	6330	7010	8	18	15
S2	5390	5660	6000	6330	7010	12	15	12
S1	5390	5660	6000	6330	7010	12	15	12
N2	5390	5660	6000	6330	7010	8	18	15
E1	580	610	650	680	750	7	10	9
W2	580	610	650	680	750	13	10	9
W1	580	610	650	680	750	13	10	9
E2	580	610	650	680	750	7	10	9

TRAFFIC VOLUME FORECAST FOR INTERSECTIONS

Date: Nov-06
Project: Des. No. 9802920
Route: HHH over CR 900N
County: Tippecanoe County
Other Info: PM-DHV

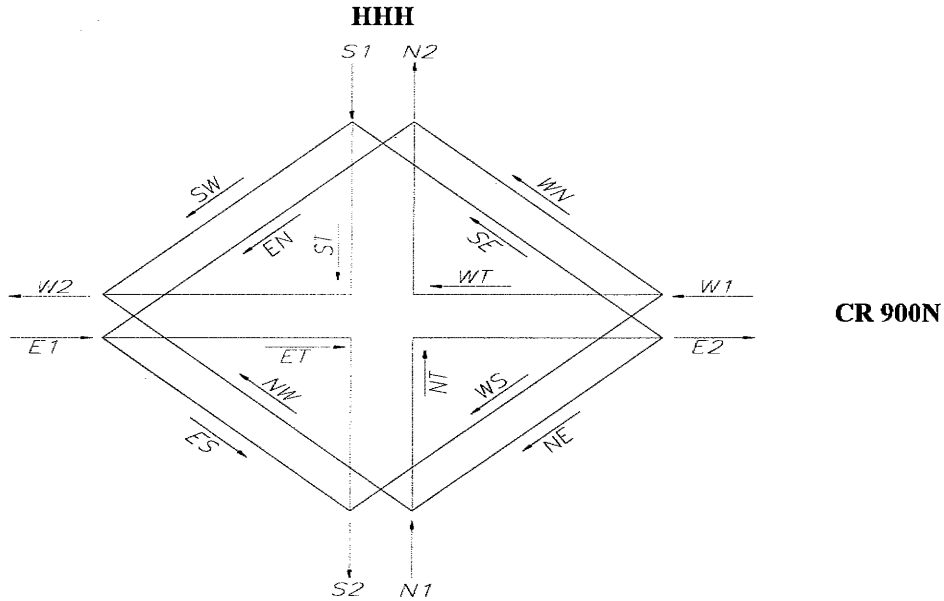

Turning Movements	AADT 2006	2010	2015	2020	2030	DHV %	COMMERCIAL VEHICLES % AADT	% DHV
NE								
NW								
NT	5390	5660	6000	6330	7010	12	18	16
SE								
SW								
ST	5390	5660	6000	6330	7010	8	15	14
ES								
EN								
ET	580	610	650	680	750	13	10	10
WN								
WS								
WT	580	610	650	680	750	7	10	10
N1	5390	5660	6000	6330	7010	12	18	16
S2	5390	5660	6000	6330	7010	8	15	14
S1	5390	5660	6000	6330	7010	8	15	14
N2	5390	5660	6000	6330	7010	12	18	16
E1	580	610	650	680	750	13	10	10
W2	580	610	650	680	750	7	10	10
W1	580	610	650	680	750	7	10	10
E2	580	610	650	680	750	13	10	10

TRAFFIC VOLUME FORECAST FOR INTERSECTIONS

Date: Nov-06
Project: Des. No. 9802920
Route: HHH at SR 25 Connector
County: Tippecanoe County
Other Info: AM-DHV

SR 25 Connector

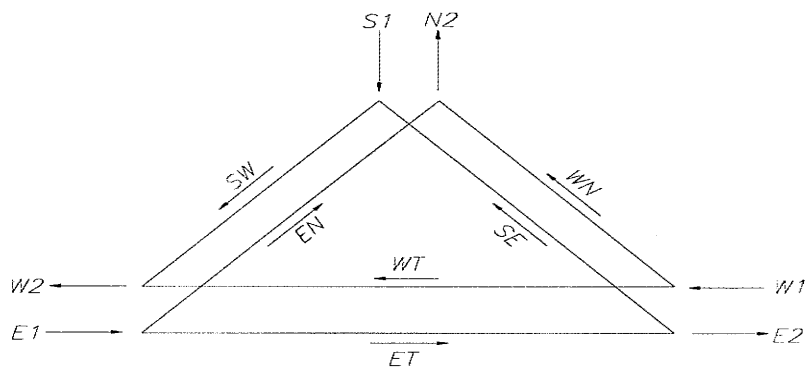

HHH

Turning Movements	AADT 2006	2010	2015	2020	2030	DHV %	COMMERCIAL VEHICLES % AADT	% DHV
NE								
NW								
NT								
SE	200	210	220	240	260	9	8	9
SW	890	930	990	1050	1160	12	6	7
ST								
ES								
EN	890	930	990	1050	1160	8	6	7
ET	4490	4710	5000	5280	5840	8	18	15
WN	200	210	220	240	260	10	8	9
WS								
WT	4490	4710	5000	5280	5840	12	15	12
N1								
S2								
S1	1090	1140	1210	1290	1420	11	6	7
N2	1090	1140	1210	1290	1420	8	6	7
E1	5380	5640	5990	6330	7000	8	16	14
W2	5380	5640	5990	6330	7000	12	14	11
W1	4690	4920	5220	5520	6100	12	15	12
E2	4690	4920	5220	5520	6100	8	18	15

TRAFFIC VOLUME FORECAST FOR INTERSECTIONS

Date: Nov-06
Project: Des. No. 9802920
Route: HHH at SR 25 Connector
County: Tippecanoe County
Other Info: PM-DHV

SR 25 Connector

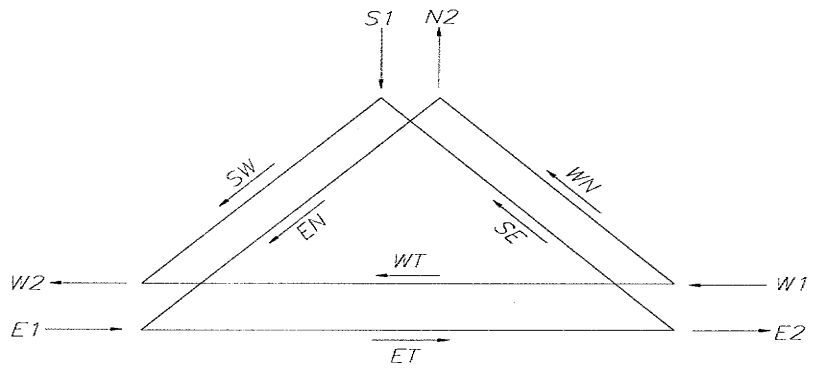

HHH

Turning Movements	AADT 2006	2010	2015	2020	2030	DHV %	COMMERCIAL VEHICLES % AADT	% DHV
NE								
NW								
NT								
SE	200	210	220	240	260	10	8	8
SW	890	930	990	1050	1160	8	6	6
ST								
ES								
EN	890	930	990	1050	1160	12	6	6
ET	4490	4710	5000	5280	5840	12	18	16
WN	200	210	220	240	260	9	8	8
WS								
WT	4490	4710	5000	5280	5840	8	15	14
N1								
S2								
S1	1090	1140	1210	1290	1420	8	6	6
N2	1090	1140	1210	1290	1420	11	6	6
E1	5380	5640	5990	6330	7000	12	16	14
W2	5380	5640	5990	6330	7000	8	14	13
W1	4690	4920	5220	5520	6100	8	15	14
E2	4690	4920	5220	5520	6100	12	18	16

TRAFFIC VOLUME FORECAST FOR INTERSECTIONS

Date: Nov-06
Project: Des. No. 9802920
Route: SR 25 Connector at Old SR 25
County: Tippecanoe County
Other Info: AM-DHV

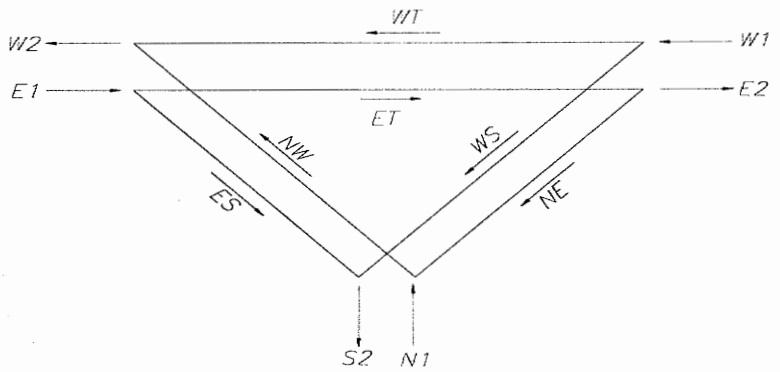

Old SR 25

SR 25 Connector

Turning Movements	AADT					DHV %	COMMERCIAL VEHICLES	
	2006	2010	2015	2020	2030		% AADT	% DHV
NE	790	830	880	930	1030	9	7	8
NW	300	320	330	350	390	8	7	8
NT								
SE								
SW								
ST								
ES	430	450	480	510	560	14	7	8
EN								
ET	540	570	600	630	700	4	8	9
WN								
WS	660	690	730	780	860	10	7	8
WT	300	320	330	350	390	6	8	9
N1	1090	1150	1210	1280	1420	8	7	8
S2	1090	1140	1210	1290	1420	11	7	8
S1								
N2								
E1	970	1020	1080	1140	1260	8	8	9
W2	600	640	660	700	780	7	8	9
W1	960	1010	1060	1130	1250	9	7	8
E2	1330	1400	1480	1560	1730	7	7	8

TRAFFIC VOLUME FORECAST FOR INTERSECTIONS

Date: Nov-06
Project: Des. No. 9802920
Route: SR 25 Connector at Old SR 25
County: Tippecanoe County
Other Info: PM-DHV

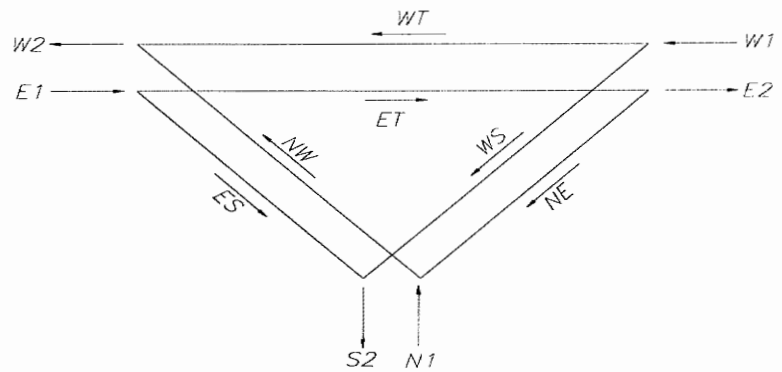

Old SR 25

SR 25 Connector

Turning Movements	AADT 2006	2010	2015	2020	2030	DHV %	COMMERCIAL VEHICLES % AADT	% DHV
NE	790	830	880	930	1030	12	7	7
NW	300	320	330	350	390	8	7	7
NT								
SE								
SW								
ST								
ES	430	450	480	510	560	8	7	7
EN								
ET	540	570	600	630	700	16	8	8
WN								
WS	660	690	730	780	860	9	7	7
WT	300	320	330	350	390	20	8	8
N1	1090	1150	1210	1280	1420	11	7	7
S2	1090	1140	1210	1290	1420	8	7	7
S1								
N2								
E1	970	1020	1080	1140	1260	12	8	8
W2	600	640	660	700	780	14	8	8
W1	960	1010	1060	1130	1250	12	7	7
E2	1330	1400	1480	1560	1730	14	7	7

TRAFFIC VOLUME FORECAST FOR INTERSECTIONS

Date: Nov-06
Project: Des. No. 9802920
Route: HHH over CR 1100E
County: Tippecanoe County
Other Info: AM-DHV

CR 1100E

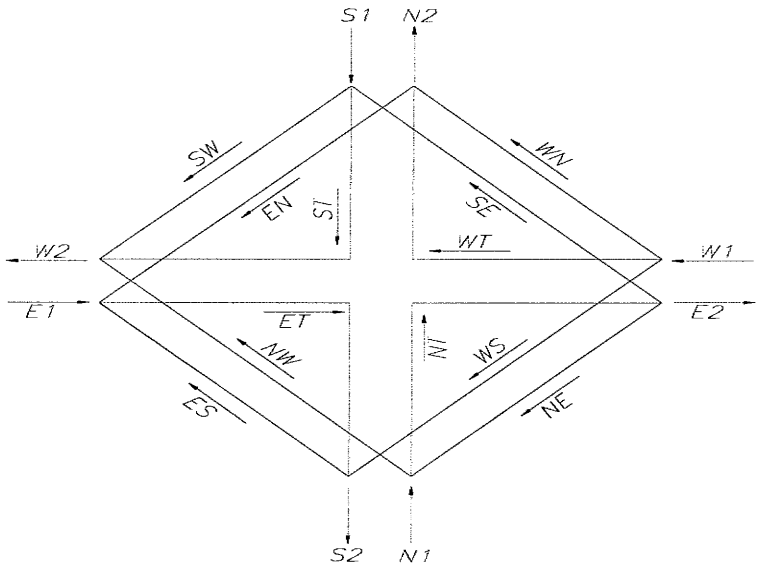

HHH

Turning Movements	AADT 2006	2010	2015	2020	2030	DHV %	COMMERCIAL VEHICLES % AADT	% DHV
NE								
NW								
NT	100	110	110	120	130	10	10	11
SE								
SW								
ST	100	110	110	120	130	10	10	11
ES								
EN								
ET	4690	4920	5220	5510	6100	8	16	11
WN								
WS								
WT	4690	4920	5220	5510	6100	12	18	14
N1	100	110	110	120	130	10	10	11
S2	100	110	110	120	130	10	10	11
S1	100	110	110	120	130	10	10	11
N2	100	110	110	120	130	10	10	11
E1	4690	4920	5220	5510	6100	8	16	11
W2	4690	4920	5220	5510	6100	12	18	14
W1	4690	4920	5220	5510	6100	12	18	14
E2	4690	4920	5220	5510	6100	8	16	11

TRAFFIC VOLUME FORECAST FOR INTERSECTIONS

Date: Nov-06
Project: Des. No. 9802920
Route: HHH over CR 1100E
County: Tippecanoe County
Other Info: PM-DHV

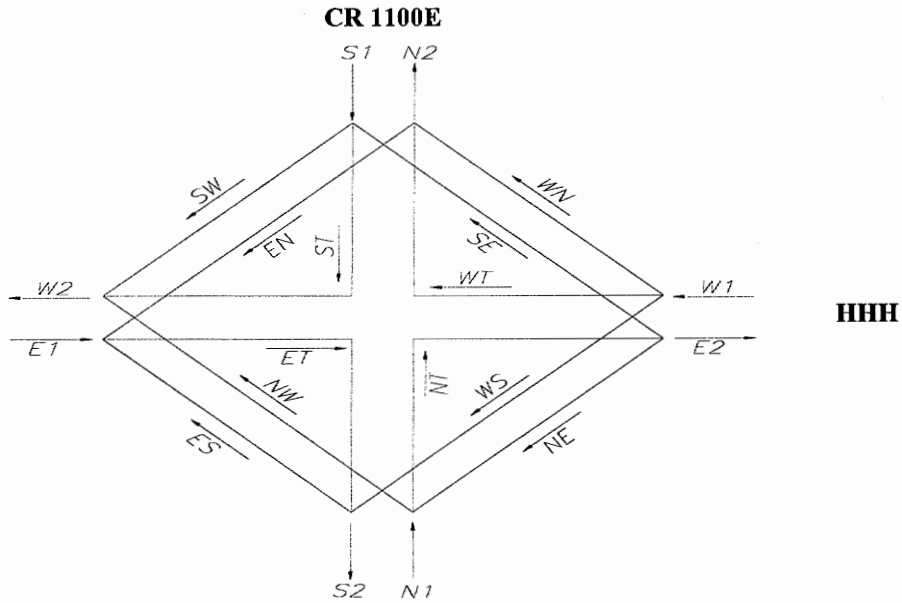

Turning Movements	AADT 2006	2010	2015	2020	2030	DHV %	COMMERCIAL VEHICLES % AADT	% DHV
NE								
NW								
NT	100	110	110	120	130	10	10	10
SE								
SW								
ST	100	110	110	120	130	10	10	10
ES								
EN								
ET	4690	4920	5220	5510	6100	12	16	13
WN								
WS								
WT	4690	4920	5220	5510	6100	9	18	19
N1	100	110	110	120	130	10	10	10
S2	100	110	110	120	130	10	10	10
S1	100	110	110	120	130	10	10	10
N2	100	110	110	120	130	10	10	10
E1	4690	4920	5220	5510	6100	12	16	13
W2	4690	4920	5220	5510	6100	9	18	19
W1	4690	4920	5220	5510	6100	9	18	19
E2	4690	4920	5220	5510	6100	12	16	13

Traffic Growth Factors

Growth Factor Summary from Engineers Report (November 2003)

Tippecanoe County	2010			2030			% Difference		
	No-Build on Existing SR 25	Traffic on Alternative	Residual Traffic Existing SR 25	No-Build on Existing SR 25	Traffic on Alternative	Residual Traffic Existing SR 25	No-Build on Existing SR 25	Traffic on Alternative	Residual Traffic Existing SR 25
I-65 to CR 450N	24100	18700	5400	29000	22500	6500	1.02%	1.02%	1.02%
CR 450N to SR 225	18100	14000	4100	23400	18100	5300	1.46%	1.46%	1.46%
SR 225 to Grant Road	15100	13000	2100	17600	15100	2500	0.83%	0.81%	0.95%
Grant Road to Co. Line	12000	9700	2300	15100	12200	2900	1.29%	1.29%	1.30%
Sub-Total	69300	55400	13900	85100	67900	17200	1.14%	1.13%	1.19%

Carroll County	2010			2030			% Difference		
	No-Build on Existing SR 25	Traffic on Alternative	Residual Traffic Existing SR 25	No-Build on Existing SR 25	Traffic on Alternative	Residual Traffic Existing SR 25	No-Build on Existing SR 25	Traffic on Alternative	Residual Traffic Existing SR 25
Co. Line to US 421	10500	6300	4200	16000	9600	6400	2.62%	2.62%	2.62%
US 421 to Main St.	11200	8900	2300	11700	9300	2400	0.22%	0.22%	0.22%
Main St. to CR 300N	9200	7100	2100	11700	9300	2400	1.36%	1.55%	0.71%
CR 300N to CR 218	7300	7000	300	8600	8100	500	0.89%	0.79%	3.33%
SR 218 to Co. Line	5100	5100	0	6500	6500	0	1.37%	1.37%	#DIV/0!
Sub-Total	43300	34400	8900	54500	42800	11700	1.29%	1.22%	1.57%

Cass County	2010			2030			% Difference		
	No-Build on Existing SR 25	Traffic on Alternative	Residual Traffic Existing SR 25	No-Build on Existing SR 25	Traffic on Alternative	Residual Traffic Existing SR 25	No-Build on Existing SR 25	Traffic on Alternative	Residual Traffic Existing SR 25
I-65 to CR 450N	5800	5800	0	8100	8100	0	1.98%	1.98%	#DIV/0!
CR 450N to SR 225	6200	6200	0	8100	8100	0	1.53%	1.53%	#DIV/0!
SR 225 to Grant Road	6600	4200	2400	8100	5100	3000	1.14%	1.07%	1.25%
Grant Road to Co. Line	7300	4600	2700	8100	5100	3000	0.55%	0.54%	0.56%
Sub-Total	25900	20800	5100	32400	26400	6000	1.25%	1.35%	0.88%
Grand Total	138500	110600	27900	172000	137100	34900	1.21%	1.20%	1.25%

12	0.63
14	0.65
27	0.83

LOS and average delay have not

oadway/travel lane based on the

y along the entire length of
rate at eight of the thirteen
Tippecanoe/Carroll County
25 operating at LOS C are
ft-turn lane) and SR 218 to
operating at LOS D or E,
fic with an acceptable level
oving traffic demand from

ıdition

Level of Service
C
C

ıar 2030 AM and PM peak-
s traffic scenario: SR 25/ I-

Existing SR 25	LOS	Avg. Delay (sec.)	v/c	LOS	Avg. Delay (sec.)	v/c
SR 25/I-65 SB	B	15	0.82	C	21	0.94
SR 25/I-65 NB	D	38	1.02	C	20	0.92
SR 25/CR 300N	D	31	0.93	B	14	0.81
SR 25/US 421N	C	19	0.78	D	32	0.92
SR 25/US 421S	F	*	*	F	*	*
US 24/US 35/SR 29						
Unsignalized	B (WB left-turn, F)			B (WB left-turn, F)		
Signalized	B	10	0.36	B	10	0.48

v/c = volume/capacity, i.e., a comparison of the traffic volume to the theoretical capacity of the roadway/travel lane based on the roadway geometry/assumptions made. * = v/c ratio greater than 1.0; delay could not be calculated.

Note: Average delay was not evaluated for unsignalized intersections.

7.5 Years 2010 and 2030 Traffic Volumes and Level of Service: Preferred Alternative

In the design year 2030, traffic volumes on the new road are projected to range from 4,600–22,500 vpd with Preferred Alternative 2. LOS A is projected in all areas except between I-65 and SR 225 in Tippecanoe County, where the highest traffic volumes (22,500–18,100 vpd) and LOS B are projected (see Table 11). Residual traffic on existing SR 25 will range from 2,400–6,500 vpd, with the LOS ranging from A to C. Between Delphi and Logansport, Alternative 2 will incorporate the existing roadway for most of the distance. Therefore, the volume of residual traffic on the existing road will be "0," as shown on Table 11.

TABLE 11—Years 2010 and 2030 Traffic Volumes and Level of Service: Preferred Alternative

Preferred Alternative 2 (OWA1-PCA1-PEA-YLA)	2010						2030					
	No-Build Traffic Existing SR 25	LOS	Traffic on Alternative	LOS	Residual Traffic Existing SR 25	LOS	No-Build Traffic Existing SR 25	LOS	Traffic on Alternative	LOS	Residual Traffic Existing SR 25	LOS
TIPPECANOE COUNTY												
I-65 to CR 450N	24,100	B	18,700	B	5,400	A	29,000	C	22,500	B	6,500	A
CR 450N to SR 225	18,100	E	14,000	A	4,100	C	23,400	E	18,100	B	5,300	C
SR 225 to Grant Road	15,100	E	13,000	A	2,100	B	17,600	E	15,100	A	2,500	B
Grant Road to Co. Line	12,000	D	9,700	A	2,300	B	15,100	E	12,200	A	2,900	C
CARROLL COUNTY												
Co. Line to US 421	10,500	D	6,300	A	4,200	C	16,000	E	9,600	A	6,400	C
US 421 to Main St. (Delphi)	11,200	D	8,900	A	2,300	B	11,700	D	9,300	A	2,400	B
Main St. to CR 300N	9,200	D	7,100	A	2,100	A	11,700	D	9,300	A	2,400	A
CR 300N to SR 218	7,300	D	7,000	A	300	A	8,600	D	8,100	A	500	A
SR 218 to Co. Line	5,100	C	5,100	A	0	N/A	6,500	C	6,500	A	0	N/A
CASS COUNTY												
Co. Line to CR 400S	5,800	C	5,800	A	0	N/A	8,100	D	8,100	A	0	N/A
CR 400S to CR 300S	6,200	C	6,200	A	0	N/A	8,100	D	8,100	A	0	N/A
CR 300S to CR 200S	6,600	C	4,200	A	2,400	A	8,100	D	5,100	A	3,000	A
CR 200S to US 24	7,300	D	4,600	A	2,700	A	8,100	D	5,100	A	3,000	A

Seasonal Adjustment Factor

SEASONAL ADJUSTMENT FACTORS BY FUNCTIONAL CLASS: 2001-2005

Urban Interstates, Freeways and Expressways

	Jan	Feb	Mar	Apr	May	Jun	Jul	Aug	Sep	Oct	Nov	Dec
2005	1.155	1.067	1.031	1.001	0.969	0.931	0.931	0.932	0.996	0.982	1.002	1.059
2004	1.186	1.086	1.049	1.004	0.997	0.920	0.951	0.938	0.966	0.978	1.009	1.065
2003	1.202	1.156	1.041	1.022	0.980	0.947	0.906	0.921	0.982	0.981	1.012	1.068
2002	1.141	1.088	1.057	1.021	0.980	0.926	0.944	0.923	0.982	0.969	0.985	1.046
2001	1.165	1.099	1.049	0.976	0.986	0.975	0.950	0.922	0.963	0.991	0.990	1.030
5 YR AVG	**1.170**	**1.099**	**1.045**	**1.005**	**0.982**	**0.940**	**0.936**	**0.927**	**0.978**	**0.980**	**1.000**	**1.054**

Urban - Principal Arterials, Minor Arterials, Collectors and Locals

	Jan	Feb	Mar	Apr	May	Jun	Jul	Aug	Sep	Oct	Nov	Dec
2005	1.095	1.008	1.039	0.975	0.982	0.944	0.957	0.956	0.990	0.987	1.039	1.089
2004	1.114	1.016	1.004	0.972	0.971	0.941	0.989	0.972	0.961	0.976	1.032	1.062
2003	1.101	1.087	1.032	0.965	0.965	0.979	0.980	0.969	0.978	0.979	1.024	1.051
2002	1.117	1.068	1.081	0.986	1.002	0.951	0.969	1.001	0.953	0.999	1.042	1.096
2001	1.127	1.060	1.068	0.987	0.976	0.982	0.952	0.890	0.981	1.035	1.049	1.083
5 YR AVG	**1.111**	**1.048**	**1.045**	**0.977**	**0.979**	**0.959**	**0.969**	**0.958**	**0.973**	**0.995**	**1.037**	**1.076**

Rural Interstates

	Jan	Feb	Mar	Apr	May	Jun	Jul	Aug	Sep	Oct	Nov	Dec
2005	1.222	1.120	1.044	1.021	0.961	0.900	0.878	0.905	1.002	0.985	0.999	1.087
2004	1.246	1.126	1.040	0.984	0.992	0.912	0.895	0.896	0.959	0.982	1.011	1.114
2003	1.223	1.239	1.070	1.032	0.967	0.925	0.887	0.909	0.982	0.971	0.987	1.043
2002	1.207	1.141	1.049	1.009	0.949	0.913	0.887	0.879	0.975	0.967	1.030	1.069
2001	1.242	1.212	1.045	1.005	0.989	0.913	0.924	0.907	0.988	0.975	0.980	1.024
5 YR AVG	**1.228**	**1.168**	**1.050**	**1.010**	**0.972**	**0.913**	**0.894**	**0.899**	**0.981**	**0.976**	**1.001**	**1.067**

Rural - Principal Arterials and Minor Arterials

	Jan	Feb	Mar	Apr	May	Jun	Jul	Aug	Sep	Oct	Nov	Dec
2005	1.164	1.074	1.046	0.988	0.940	0.907	0.921	0.934	0.974	0.985	1.042	1.103
2004	1.198	1.091	1.038	0.987	0.962	0.918	0.917	0.925	0.957	0.992	1.040	1.104
2003	1.166	1.149	1.064	1.013	0.954	0.905	0.906	0.903	0.956	0.964	1.024	1.086
2002	1.126	1.086	1.091	1.021	0.933	0.935	0.939	0.903	0.976	0.992	1.056	1.096
2001	1.173	1.109	1.068	1.015	0.966	0.908	0.970	0.935	0.973	0.951	0.990	1.055
5 YR AVG	**1.165**	**1.102**	**1.061**	**1.005**	**0.951**	**0.915**	**0.931**	**0.920**	**0.967**	**0.977**	**1.030**	**1.089**

Rural - Major Collectors, Minor Collectors and Locals

	Jan	Feb	Mar	Apr	May	Jun	Jul	Aug	Sep	Oct	Nov	Dec
2005	1.123	1.066	1.060	0.980	0.958	0.936	0.937	0.928	0.982	0.980	1.032	1.110
2004	1.180	1.081	1.056	0.973	0.941	0.948	0.948	0.966	0.948	0.973	1.016	1.064
2003	1.105	1.140	1.059	1.011	0.956	0.937	0.954	0.989	0.994	0.998	1.033	1.087
2002	1.111	1.075	1.099	1.006	0.950	0.893	0.970	0.928	1.027	0.989	1.065	1.130
2001	1.293	1.153	1.056	0.990	0.960	0.968	0.926	0.945	0.982	1.027	1.067	1.068
5 YR AVG	**1.162**	**1.103**	**1.066**	**0.992**	**0.953**	**0.936**	**0.947**	**0.951**	**0.987**	**0.993**	**1.043**	**1.092**

Note: These seasonal adjustment factors are used to expand 24-hour weekday counts (Monday, Tuesday, Wednesday, Thursday) to estimate AADT for roads counted periodically around the state.

Source: Indiana Department of Transportation, Division of Planning,Traffic Monitoring Section JANUARY, 2006

ROUTE: SR 25

COUNTY: TIPPECANOE

DES. NO.: 9802920

RURAL

RECEIVED
MAR 30 2006
By YCB

SEASONAL ADJUSTMENT FACTOR: 0.987

TMA 10/10/06

Axle Adjustment Factor Derivation

AADT Average (Sta. 5 and 10)

Avg. NB CV %	Avg. SB CV %
16%	18%
Avg. NB AAF %	Avg. SB AFF %
0.864	0.861

AM DHV Average (Sta. 5 and 10)

Avg. NB CV %	Avg. SB CV %
11%	14%
Avg. NB AAF %	Avg. SB AFF %
0.911	0.896

PM DHV Average (Sta. 5 and 10)

Avg. NB CV %	Avg. SB CV %
13%	19%
Avg. NB AAF %	Avg. SB AFF %
0.888	0.862

INDOT Traffic Forecasts
Date: Oct-06
Route: SR 25
City/County: Carroll
Des. No.: 0300694
Subject: Classification Count Analysis

Station #: 5 SR 25, South of CR 300N

Date	Bin	L1-N	L2-N	Sum	Factor	Extension
9/19/2006	1	6		6		
AADT	2	2316		2316		
	3	1106		1106		
	4	93		93		
	5	181		181		
	6	13		13	0.5	6.5
	7	7		7	1	7
	8	52		52	1	52
	9	348		348	1.5	522
	10	2		2	2	4
	11	3		3	1.5	4.5
	12	0		0	2	0
	13	0		0	2.5	0
	None	0		0		
	Other	0		0		
	Total	4127	0	4127		596

AADT Northbound CV%= 17%

AADT Northbound Axle Adjustment Factor= 0.874

Date	Bin	L1-S	L2-S	Sum	Factor	Extension
9/19/2006	1	8		8		
AADT	2	2274		2274		
	3	1118		1118		
	4	95		95		
	5	246		246		
	6	35		35	0.5	17.5
	7	6		6	1	6
	8	58		58	1	58
	9	366		366	1.5	549
	10	3		3	2	6
	11	3		3	1.5	4.5
	12	0		0	2	0
	13	4		4	2.5	10
	None	0		0		
	Other	0		0		
	Total	4216	0	4216		651

AADT Southbound CV%= 19%

AADT Southbound Axle Adjustment Factor= 0.866

Date	Bin	L1-N	L2-N	Sum	Factor	Extension
9/19/2006	1	0		0		
AM DHV	2	141		141		
	3	65		65		
	4	6		6		
	5	6		6		
	6	1		1	0.5	0.5
	7	0		0	1	0
	8	0		0	1	0
	9	15		15	1.5	22.5
	10	0		0	2	0
	11	0		0	1.5	0
	12	0		0	2	0
	13	0		0	2.5	0
	None	0		0		
	Other	0		0		
	Total	234	0	234		23

AM-DHV Northbound CV%= 12%

AM-DHV Northbound Axle Adjustment Factor= 0.911

Date	Bin	L1-S	L2-S	Sum	Factor	Extension
9/19/2006	1	1		1		
AM DHV	2	194		194		
	3	110		110		
	4	8		8		
	5	18		18		
	6	2		2	0.5	1
	7	0		0	1	0
	8	4		4	1	4
	9	18		18	1.5	27
	10	0		0	2	0
	11	0		0	1.5	0
	12	0		0	2	0
	13	0		0	2.5	0
	None	0		0		
	Other	0		0		
	Total	355	0	355		32

AM-DHV Southbound CV%= 14%

AM-DHV Southbound Axle Adjustment Factor= 0.917

Date	Bin	L1-N	L2-N	Sum	Factor	Extension
9/19/2006	1	0		0		
PM DHV	2	262		262		
	3	128		128		
	4	10		10		
	5	14		14		
	6	1		1	0.5	0.5
	7	0		0	1	0
	8	5		5	1	5
	9	26		26	1.5	39
	10	0		0	2	0
	11	0		0	1.5	0
	12	0		0	2	0
	13	0		0	2.5	0
	None	0		0		
	Other	0		0		
	Total	446	0	446		44.5

PM-DHV Northbound CV%= 13%

PM-DHV Northbound Axle Adjustment Factor= 0.909

Date	Bin	L1-S	L2-S	Sum	Factor	Extension
9/19/2006	1	0		0		
PM DHV	2	168		168		
	3	81		81		
	4	13		13		
	5	17		17		
	6	3		3	0.5	1.5
	7	1		1	1	1
	8	4		4	1	4
	9	26		26	1.5	39
	10	0		0	2	0
	11	0		0	1.5	0
	12	0		0	2	0
	13	0		0	2.5	0
	None	0		0		
	Other	0		0		
	Total	313	0	313		45.5

PM-DHV Southbound CV%= 20%

PM-DHV Southbound Axle Adjustment Factor= 0.873

INDOT Traffic Forecasts
Date: Oct-06
Route: SR 25
City/County: Carroll
Des. No.: 0300694
Subject: Classification Count Analysis

Station #: 10 SR 25, North of SR 218

Date	Bin	L1-N	L2-N	Sum	Factor	Extension
9/19/2006	1	3		3		
AADT	2	1788		1788		
	3	678		678		
	4	36		36		
	5	68		68		
	6	4		4	0.5	2
	7	2		2	1	2
	8	56		56	1	56
	9	290		290	1.5	435
	10	1		1	2	2
	11	0		0	1.5	0
	12	0		0	2	0
	13	0		0	2.5	0
	None	0		0		
	Other	0		0		
	Total	2926	0	2926		497

AADT Northbound CV%= 16%

AADT Northbound Axle Adjustment Factor= 0.855

Date	Bin	L1-S	L2-S	Sum	Factor	Extension
9/19/2006	1	3		3		
AADT	2	1795		1795		
	3	693		693		
	4	48		48		
	5	67		67		
	6	30		30	0.5	15
	7	0		0	1	0
	8	57		57	1	57
	9	285		285	1.5	427.5
	10	2		2	2	4
	11	2		2	1.5	3
	12	0		0	2	0
	13	0		0	2.5	0
	None	0		0		
	Other	0		0		
	Total	2982	0	2982		506.5

AADT Southbound CV%= 16%

AADT Southbound Axle Adjustment Factor= 0.855

Date	Bin	L1-N	L2-N	Sum	Factor	Extension
9/19/2006	1	0		0		
AM DHV	2	110		110		
	3	42		42		
	4	3		3		
	5	3		3		
	6	0		0	0.5	0
	7	0		0	1	0
	8	0		0	1	0
	9	11		11	1.5	16.5
	10	0		0	2	0
	11	0		0	1.5	0
	12	0		0	2	0
	13	0		0	2.5	0
	None	0		0		
	Other	0		0		
	Total	169	0	169		16.5

AM-DHV Northbound CV%= 10%

AM-DHV Northbound Axle Adjustment Factor= 0.911

Date	Bin	L1-S	L2-S	Sum	Factor	Extension
9/19/2006	1	1		1		
AM DHV	2	150		150		
	3	55		55		
	4	4		4		
	5	5		5		
	6	1		1	0.5	0.5
	7	0		0	1	0
	8	2		2	1	2
	9	21		21	1.5	31.5
	10	0		0	2	0
	11	0		0	1.5	0
	12	0		0	2	0
	13	0		0	2.5	0
	None	0		0		
	Other	0		0		
	Total	239	0	239		34

AM-DHV Southbound CV%= 14%

AM-DHV Southbound Axle Adjustment Factor= 0.875

Date	Bin	L1-N	L2-N	Sum	Factor	Extension
9/19/2006	1	0		0		
PM DHV	2	199		199		
	3	77		77		
	4	3		3		
	5	6		6		
	6	0		0	0.5	0
	7	0		0	1	0
	8	6		6	1	6
	9	29		29	1.5	43.5
	10	0		0	2	0
	11	0		0	1.5	0
	12	0		0	2	0
	13	0		0	2.5	0
	None	0		0		
	Other	0		0		
	Total	320	0	320		49.5

PM-DHV Northbound CV%= 14%

PM-DHV Northbound Axle Adjustment Factor= 0.866

Date	Bin	L1-S	L2-S	Sum	Factor	Extension
9/19/2006	1	0		0		
PM DHV	2	126		126		
	3	46		46		
	4	4		4		
	5	4		4		
	6	2		2	0.5	1
	7	0		0	1	0
	8	4		4	1	4
	9	21		21	1.5	31.5
	10	0		0	2	0
	11	0		0	1.5	0
	12	0		0	2	0
	13	0		0	2.5	0
	None	0		0		
	Other	0		0		
	Total	207	0	207		36.5

PM-DHV Southbound CV%= 17%

PM-DHV Southbound Axle Adjustment Factor= 0.850

CTE ENGINEERS CONSOER TOWNSEND ENVIRODYNE ENGINEERS, INC.	PROJECT INDOT TRAFFIC FORECASTING			JOB NO.
	SUBJECT AXLE ADJUSTMENT FACTOR			SHEET 1
	DESIGNED TMA	DATE 5/5/06	CHECKED	DATE

URBAN CONDITIONS

PERCENTAGE OF COMMERCIAL VEHICLES IN TRAFFIC: 5%

$$95\%\ AADT_{PASS.\ CARS} + 5\%\ AADT_{C.V.} = 24\text{-HOUR VOLUME}$$

ASSUME AVERAGE NUMBER OF AXLES PER COMMERCIAL VEHICLE: 4

$$\therefore AADT_{C.V.} = 2AADT_{PC}$$

$$0.95\,AADT_{PC} + 0.05\,(2AADT_{PC}) = 24\text{-HOUR VOLUME}$$

$$0.95\,AADT_{PC} + 0.10\,AADT_{PC} = 24\text{-HOUR VOLUME}$$

$$1.05\,AADT_{PC} = 24\text{ HOUR VOLUME}$$

$$AADT_{PC} = \frac{24\text{ HOUR VOLUME}}{1.05}$$

$$= 0.952\,(24\text{ HOUR VOLUME})$$

LEGEND

$AADT_{PC}$: AVERAGE ANNUAL DAILY TRAFFIC — PASSENGER CARS

$AADT_{CV}$: " " " " " " " " — COMMERCIAL VEHICLES

CTE ENGINEERS CONSOER TOWNSEND ENVIRODYNE ENGINEERS, INC.	PROJECT INDOT TRAFFIC FORECASTING			JOB NO.
	SUBJECT AXLE ADJUSTMENT FACTOR			SHEET 1
	DESIGNED TMA	DATE 5/5/06	CHECKED	DATE

RURAL CONDITIONS

PERCENTAGE OF COMMERCIAL VEHICLES IN TRAFFIC : 10%

$$90\% \ AADT_{PC} + 10\% \ AADT_{C.V.} = 24\text{-HOUR VOLUME}$$

ASSUME AVERAGE NUMBER OF AXLES PER COMMERCIAL VEHICLE : 4

$$\therefore \ AADT_{C.V.} = 2AADT_{PC}$$

$$0.90 \ AADT_{PC} + 0.10 \left(2 \ AADT_{PC}\right) = 24\text{-HOUR VOLUME}$$

$$0.90 \ AADT_{PC} + 0.20 \ AADT_{PC} = 24\text{-HOUR VOLUME}$$

$$1.10 \ AADT_{PC} = 24 \text{ HOUR VOLUME}$$

$$AADT_{PC} = \frac{24\text{-HOUR VOLUME}}{1.10}$$

$$= 0.909 \left(24 \text{ HOUR VOLUME}\right)$$

LEGEND

$AADT_{PC}$ = AVERAGE ANNUAL DAILY TRAFFIC – PASSENGER CARS

$AADT_{CV}$ = " " " " " " " " – COMMERCIAL VEHICLES

n sections of SR 25, and
ns. Existing and projected
idor. The thirteen roadway

s (S)
s (S)
e (S)

Street (S)

s of SR 25. The analysis
ls of service D or E (see
ıas a five-lane section, the
te analysis was performed
ıside, provides a summary
ections analyzed currently
s now signalized, was not
a signalized intersection.)
ɔund and westbound.

SR 25

TABLE 5—Intersection Level of Service Summary – Base Year 2000 Volumes– Existing SR 25

Intersection With Existing SR 25	AM Peak Hour			PM Peak Hour		
	LOS	Avg. Delay (sec.)	v/c	LOS	Avg. Delay (sec.)	v/c
SR 25/I-65 SB	*	*		*	*	
SR 25/I-65 NB	C	17	0.83	B	10	0.50
SR 25/CR 300N	B	10	0.53	B	10	0.57
SR 25/US 421N	B	11	0.49	B	11	0.53
SR 25/US 421S	C	21	0.67	C	23	0.68
US 24/US 35/SR 29	A			A		

* This intersection had not been signalized when the capacity analysis was performed; therefore, LOS and average delay have not been evaluated.

Note: Average delay was not evaluated for unsignalized intersections.

v/c = volume/capacity, i.e., a comparison of the traffic volume to the service capacity of the roadway based on the roadway's characteristics.

TABLE 6— Year 2000 Heavy Vehicle Traffic (Percent of Total Traffic)

Location on Existing SR 25	Percent Heavy Vehicles		
I-65 to SR 225	EB 22.7	WB 12.3	Average 17.8
SR 225 to Americus	EB 11.9	WB 19.1	Average 15.6
Americus to Delphi	EB 21.4	WB 14.7	Average 18.1
Rockfield to Burrows	EB 27.1	WB 15.8	Average 21.5
Corridor Average	17.7 %		

(AVG. EB 18.6% IN TIPP. Co.
AVG. WB 15.4% IN TIPP. Co.) USE 18/15/16 EB
15/12/14 WB IN TIPP. Co.

7.3 Year 2010 Volumes

Traffic volumes were projected to the year 2010 based on historical growth trends along the entire length of SR 25. The LOS analysis was again made assuming the increased traffic volumes on the existing roadway conditions. Using the projected 2010 traffic, the analysis indicates that over half of the corridor would operate at an unacceptable level of service D or E. Compared with year 2000 volumes, the level of service remains the same for the westerly sections between I-65 and CR 300N east of Delphi. The section from CR 300N to SR 218 drops from LOS C to LOS D. Also, the segment of SR 25 from CR 200S to US 24 worsens from LOS C to LOS D. Table 7 summarizes the results of the SR 25 mainline capacity analyses.

TABLE 7—Level of Service Summary – Year 2010 Volumes, "No-Build" Condition

Roadway Section of Existing SR 25	Projected Traffic Volume: AADT	Level of Service
I-65 to CR 450N	24,100	B
CR 450N to SR 225	18,100	E
SR 225 to Grant Road	15,100	E
Grant Road to Tippecanoe/Carroll Co. Line	12,000	D
County Line to US 421	10,500	D
US 421 to Main Street (Delphi)	[illegible]	

AADT, AM Peak Hour, PM Peak Hour & Commercial Vehicle Percentage Derivation

CTE ENGINEERS
CONSOER TOWNSEND ENVIRODYNE ENGINEERS, INC.

PROJECT INDOT FORECASTING			JOB NO.
SUBJECT SR 25 @ I-65 AADT DERIVATION			SHEET
DESIGNED TXIA	DATE 11/3/06	CHECKED	DATE

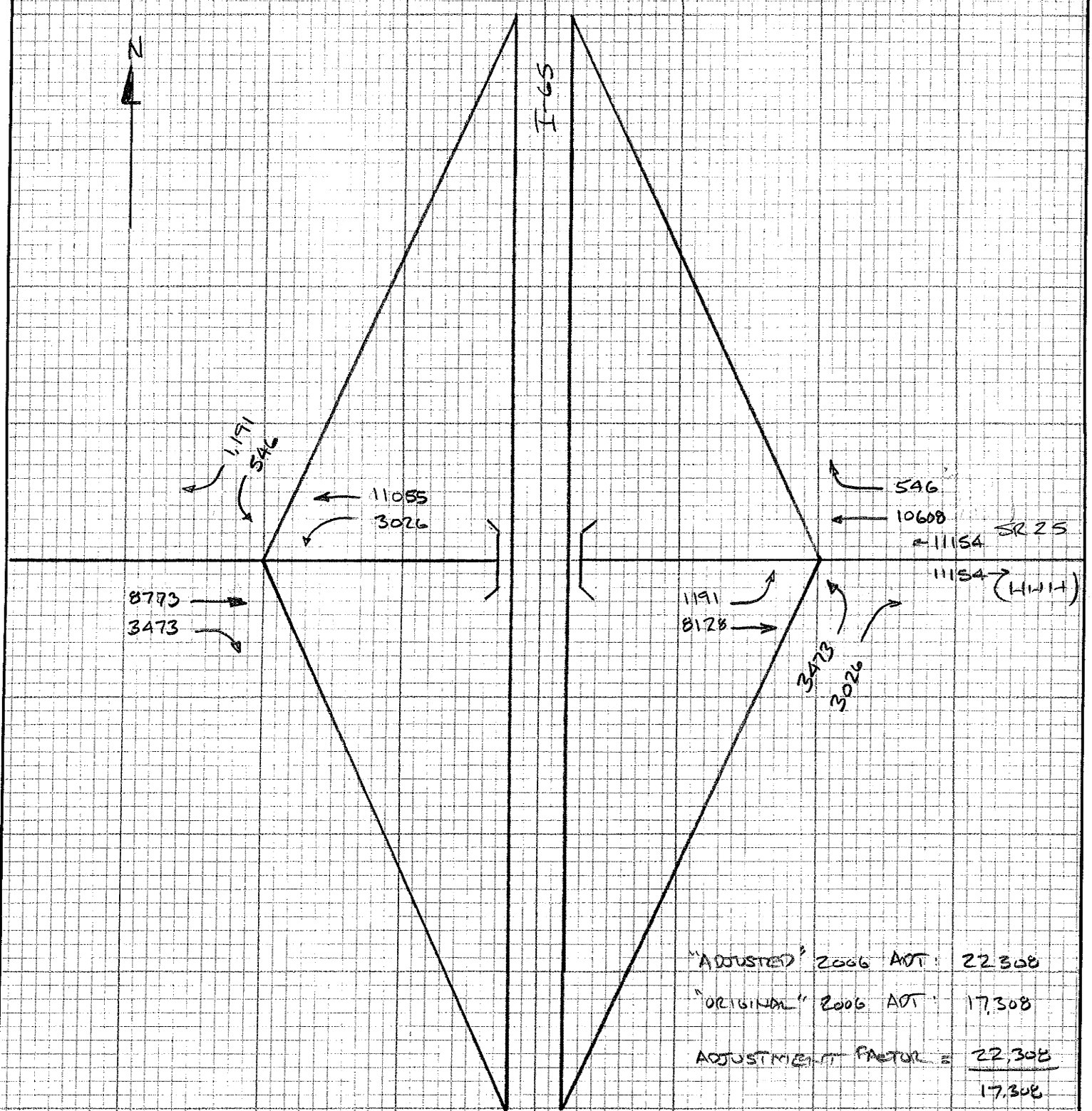

"ADJUSTED" 2006 AADT: 22,308

"ORIGINAL" 2006 AADT: 17,308

ADJUSTMENT FACTOR = $\frac{22,308}{17,308}$

= 1.29

(APPLY TO ALL VOLUMES AT INTERCHANGE)

CTE ENGINEERS
CONSOER TOWNSEND ENVIRODYNE ENGINEERS, INC.

PROJECT INDOT FORECASTING			JOB NO.
SUBJECT SR 25 @ I-65 AM-DHV DERIVATION			SHEET
DESIGNED TMA	DATE 11/3/06	CHECKED	DATE

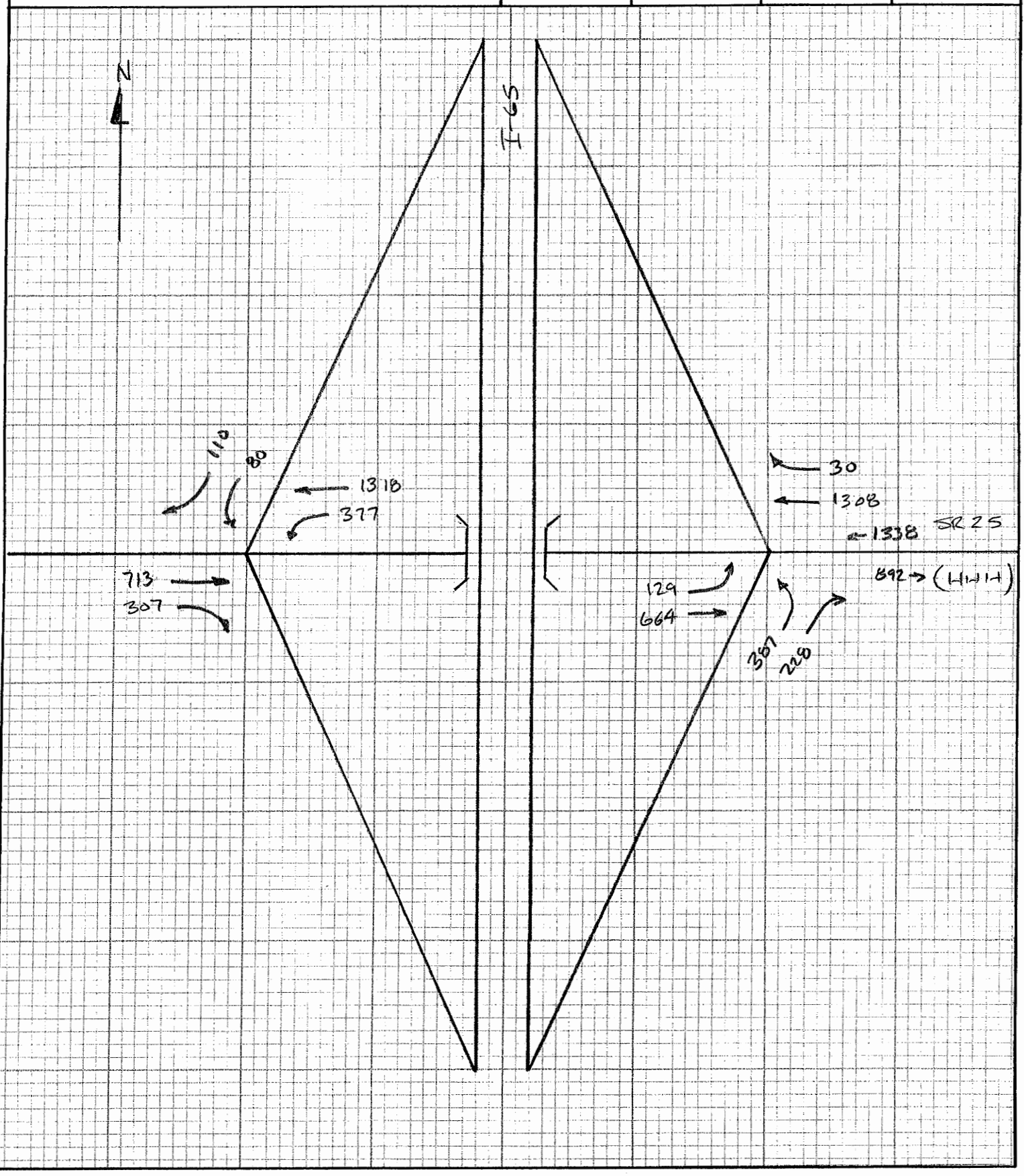

CTE ENGINEERS
CONSOER TOWNSEND ENVIRODYNE ENGINEERS, INC.

PROJECT INDOT FORECASTING			JOB NO.
SUBJECT SR 26 @ I-65 PM - DHV DERIVATION			SHEET
DESIGNED TMA	DATE 11/3/06	CHECKED	DATE

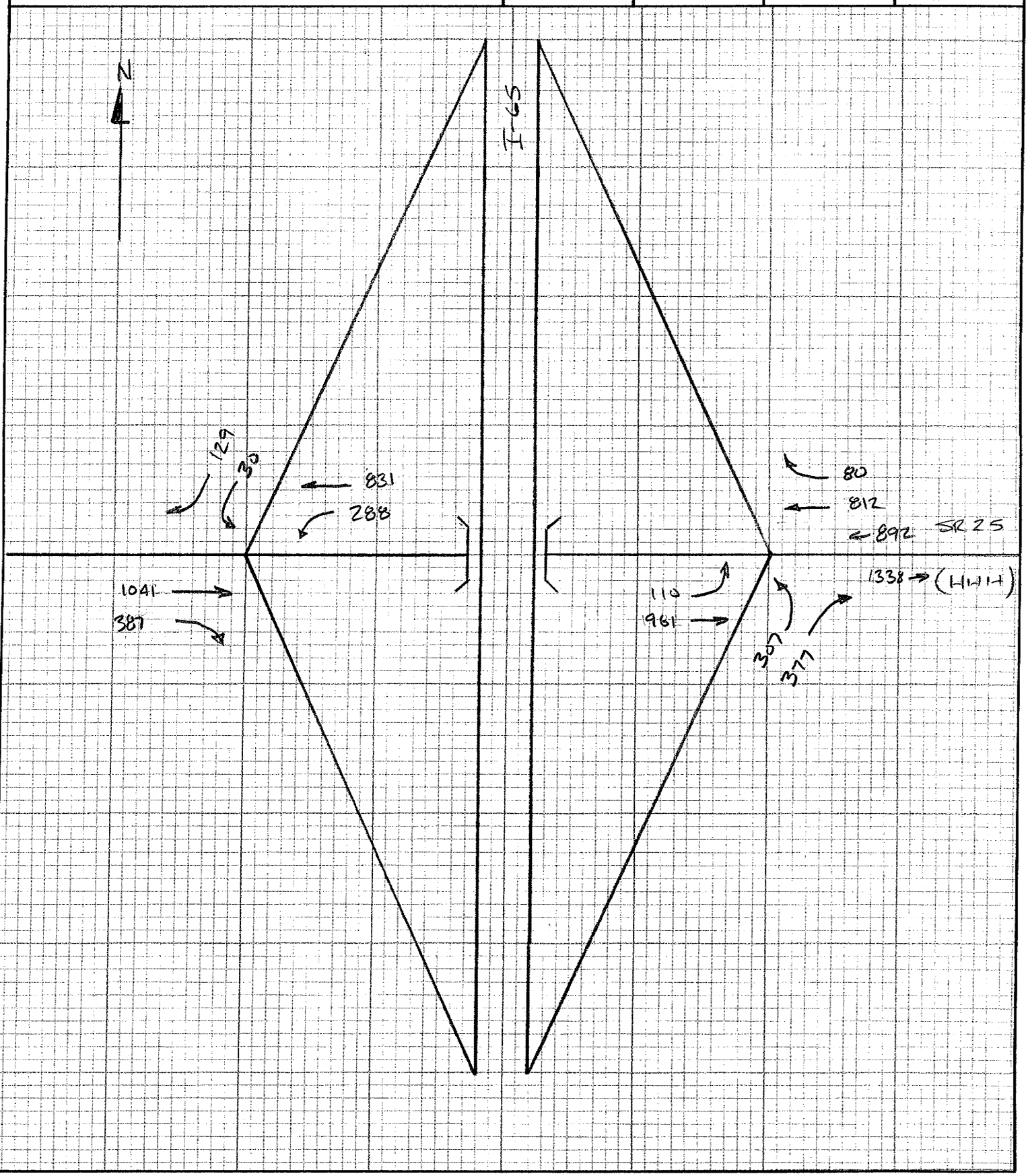

2030 AADT G

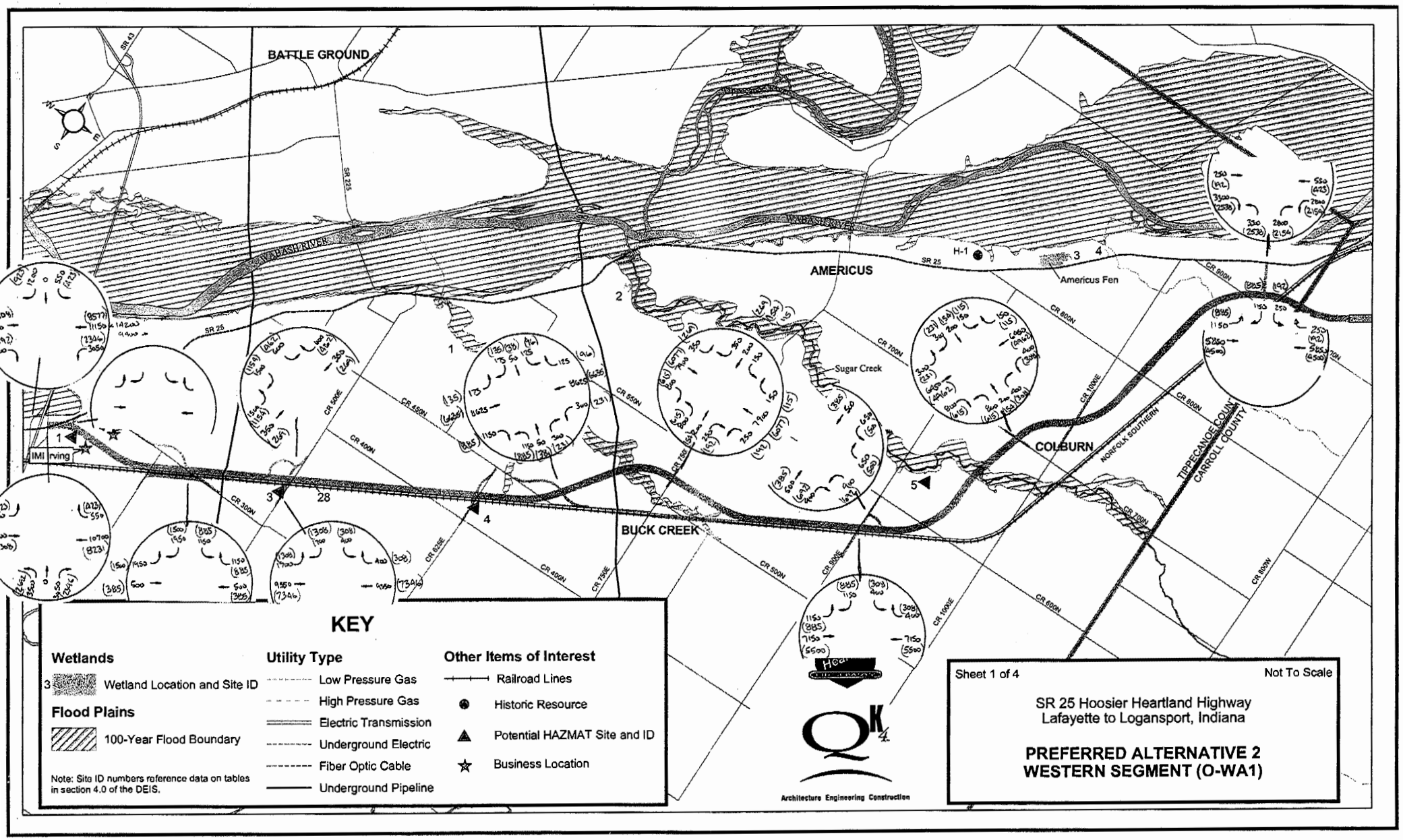
BATTLE GROUND
WABASH RIVER
AMERICUS
Americus Fen
Sugar Creek
COLBURN
BUCK CREEK
NORFOLK SOUTHERN
TIPPECANOE COUNTY
CARROLL COUNTY
SR 25
SR 225
SR 43
CR 300N
CR 400N
CR 450N
CR 500N
CR 550N
CR 600N
CR 700N
CR 800N
CR 900N
CR 500E
CR 625E
CR 750E
CR 800E
CR 1000E
H-1
IMI rving
KEY
Wetlands
Wetland Location and Site ID
Flood Plains
100-Year Flood Boundary
Note: Site ID numbers reference data on tables in section 4.0 of the DEIS.
Utility Type
Low Pressure Gas
High Pressure Gas
Electric Transmission
Underground Electric
Fiber Optic Cable
Underground Pipeline
Other Items of Interest
Railroad Lines
Historic Resource
Potential HAZMAT Site and ID
Business Location
Architecture Engineering Construction
Sheet 1 of 4
Not To Scale
SR 25 Hoosier Heartland Highway
Lafayette to Logansport, Indiana
PREFERRED ALTERNATIVE 2
WESTERN SEGMENT (O-WA1)

2030 Am-DHU "ER

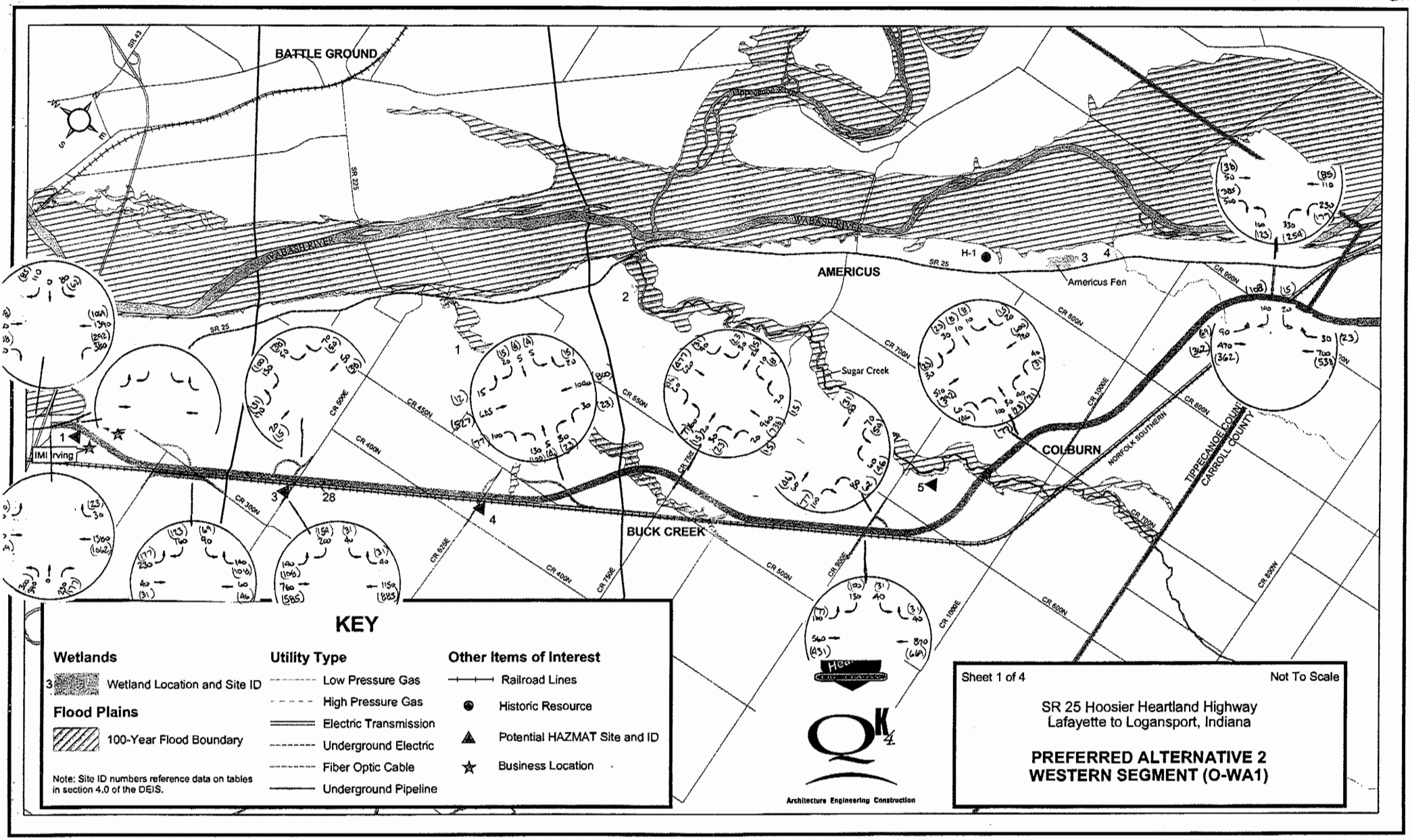

2030 PM-DHU ER

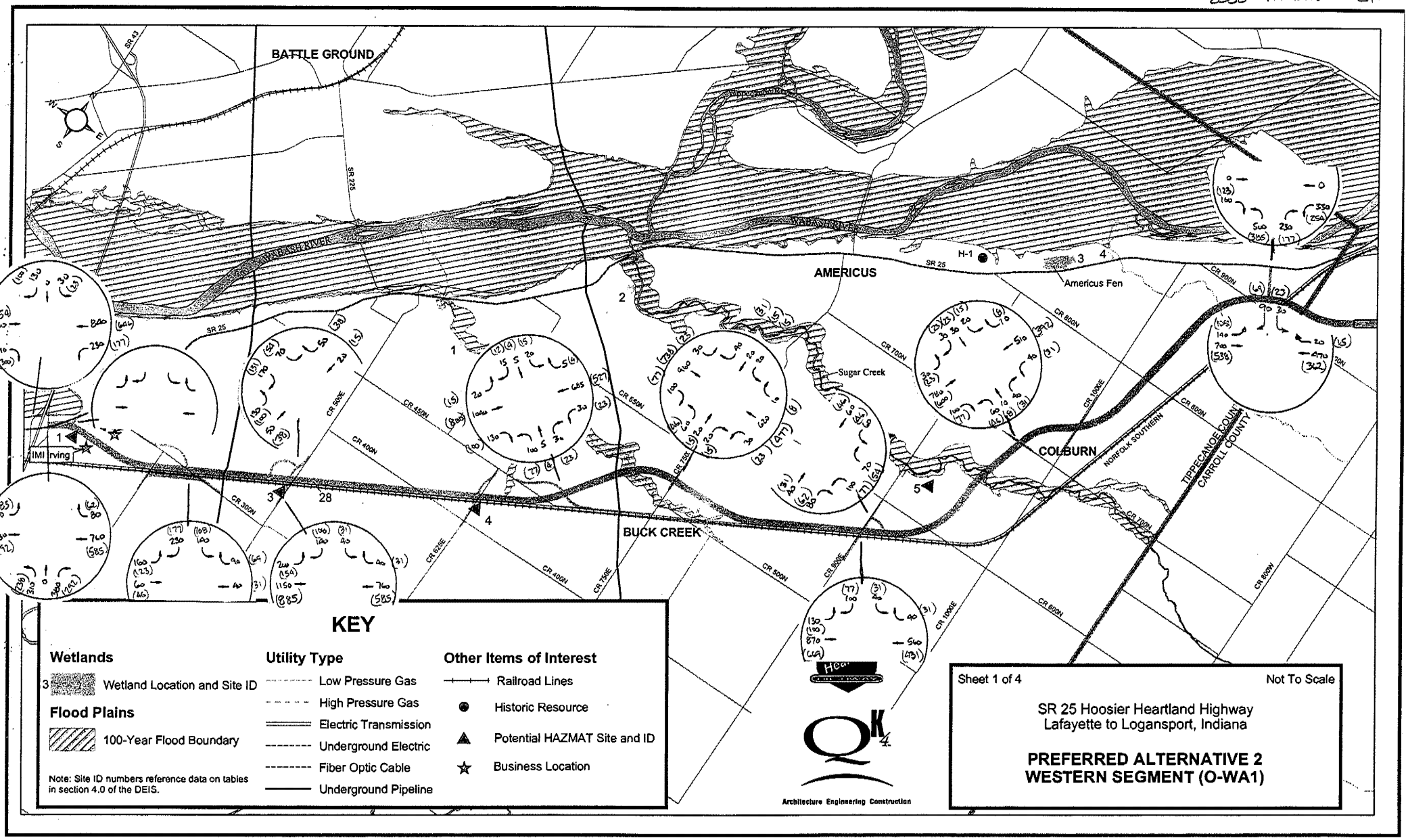

INDOT Traffic Forecasts
Analysis Date: Oct-06
Route: SR 25
City/County: Tippecanoe
Des. No.: 9802920
Subject: Turning Movement Analysis SR 25 at CR 900N
Count Date: Jan-03

Passenger Cars	1 Southbound SL	ST	SR	2 Eastbound EL	ET	ER	3 Northbound NL	NT	NR	4 Westbound WL	WT	WR	Total
Time													
600													0
700													0
800					206	47	76		1	1	317		648
900					121	16	42		0	1	215		395
1000													0
1100													0
1200													0
1300													0
1400													0
1500													0
1600					443	60	59		0	3	297		862
1700					460	84	50		8	3	339		944
Subtotal-Cars:		0	0	0	0	1230	207	227	0	9	8	1168	0	2849

Trucks	1 Southbound SL	ST	SR	2 Eastbound EL	ET	ER	3 Northbound NL	NT	NR	4 Westbound WL	WT	WR	Total
Time													
600													0
700													0
800					16	2	1		0	0	48		67
900					55	2	1		0	0	46		104
1000													0
1100													0
1200													0
1300													0
1400													0
1500													0
1600					21	1	1		0	0	26		49
1700					16	0	1		0	0	17		34
Subtotal-Trucks:		0	0	0	0	108	5	4	0	0	0	137	0	254

AADT		SL	ST	SR		EL	ET	ER		NL	NT	NR		WL	WT	WR
Cars		0	0	0		0	1230	207		227	0	9		8	1168	0
Trucks		0	0	0		0	108	5		4	0	0		0	137	0
Total	0	0	0	0	1550	0	1338	212	240	231	0	9	1313	8	1305	0
Turning %		#####	#####	#####		0.0000	0.8632	0.1368		0.9625	0.0000	0.0375		0.0061	0.9939	0.0000
%CV		#####	#####	#####		#####	0.0807	0.0236		0.0173	#DIV/0!	0.0000		0.0000	0.1050	#####

AM DHV		SL	ST	SR		EL	ET	ER		NL	NT	NR		WL	WT	WR
Cars		0	0	0		0	327	63		118	0	1		2	532	0
Trucks		0	0	0		0	71	4		2	0	0		0	94	0
Total	0	0	0	0	465	0	398	67	121	120	0	1	628	2	626	0
Turning %		#####	#####	#####		0.0000	0.8559	0.1441		0.9917	0.0000	0.0083		0.0032	0.9968	0.0000
%CV		#####	#####	#####		#####	0.1784	0.0597		0.0167	#DIV/0!	0.0000		0.0000	0.1502	#####

PM DHV		SL	ST	SR		EL	ET	ER		NL	NT	NR		WL	WT	WR
Cars		0	0	0		0	903	144		109	0	8		6	636	0
Trucks		0	0	0		0	37	1		2	0	0		0	43	0
Total	0	0	0	0	1085	0	940	145	119	111	0	8	685	6	679	0
Turning %		#####	#####	#####		0.0000	0.8664	0.1336		0.9328	0.0000	0.0672		0.0088	0.9912	0.0000
%CV		#####	#####	#####		#####	0.0394	0.0069		0.0180	#DIV/0!	0.0000		0.0000	0.0633	#####

Seed Matrices for TMOVES:

	AADT Left	Thru	Right		AM-DHV Left	Thru	Right		PM-DHV Left	Thru	Right
1	0	0	0	1	0	0	0	1	0	0	0
2	0	1338	212	2	0	398	67	2	0	940	145
3	231	0	9	3	120	0	1	3	111	0	8
4	8	1305	0	4	2	626	0	4	6	679	0

CR 900 N TRAFFIC: 207 + 227 + 4 + 8 + 5 + 4 = 460 VEH.

" " PER PEAK PERIOD: 460 / 2 = 230 VEH

" " PER PEAK HOUR: 230 / 2 = 115

CR 900 N ADT ESTIMATE: PEAK PERIOD × 10 = 115 × 10 1150 VPD (575 EB / 575 WB)

AM PEAK 65% WB / 35% EB SPLIT

PM PEAK 35% WB / 65% EB SPLIT

Turning Movement Computations

FIGURE 1

Intersection	Hoosier Heartland Highway @ I-65 S-Bound Ramps
Jurisdiction	Indiana
Year/Time Period	2030 Design Hour

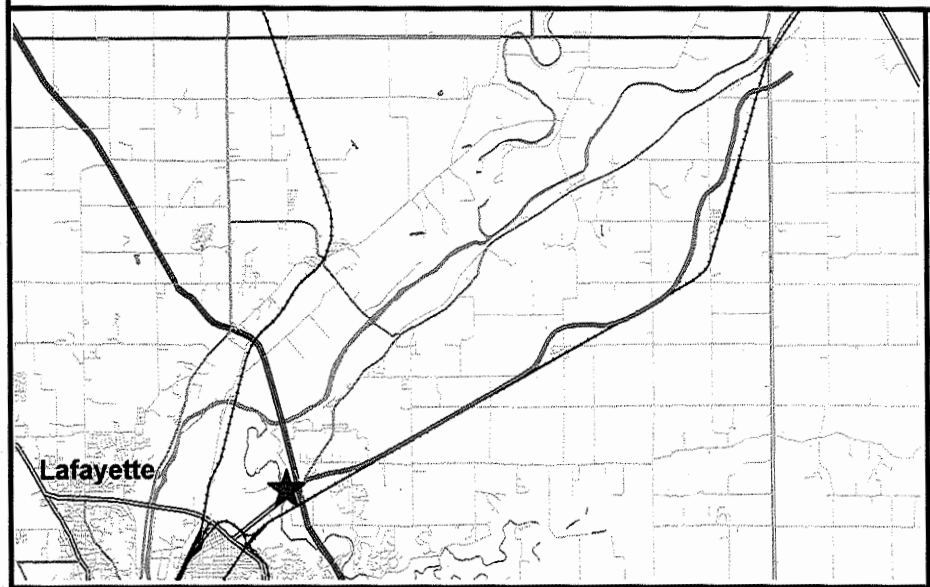

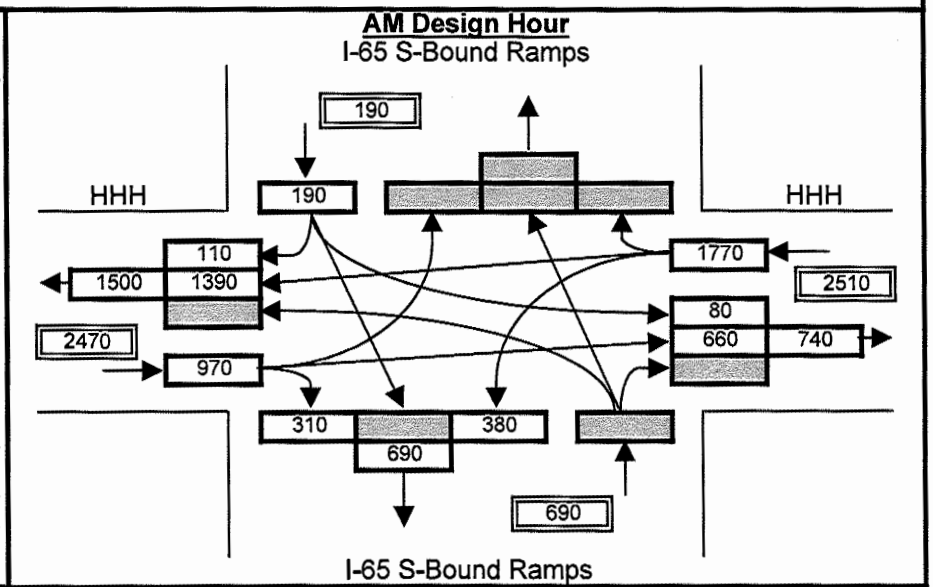

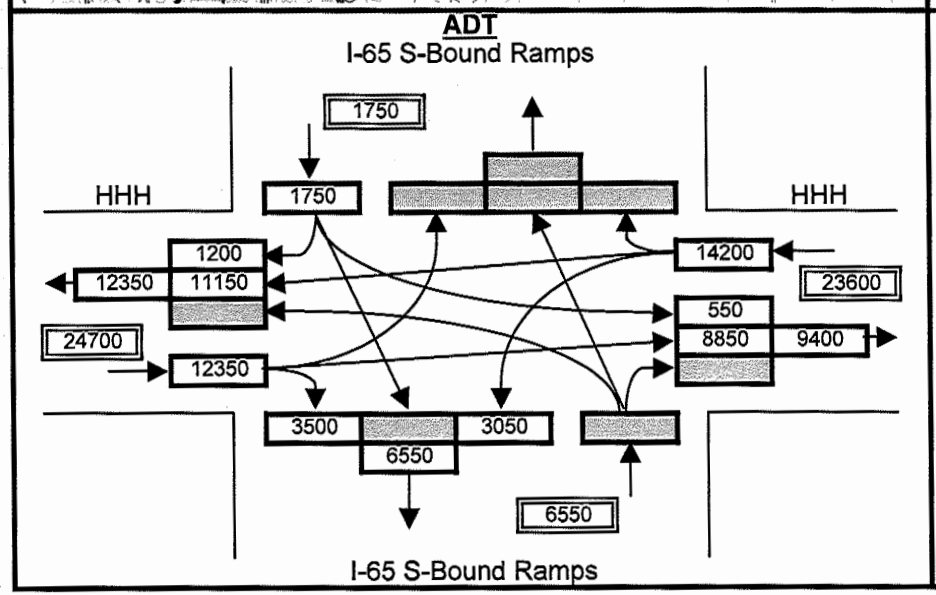

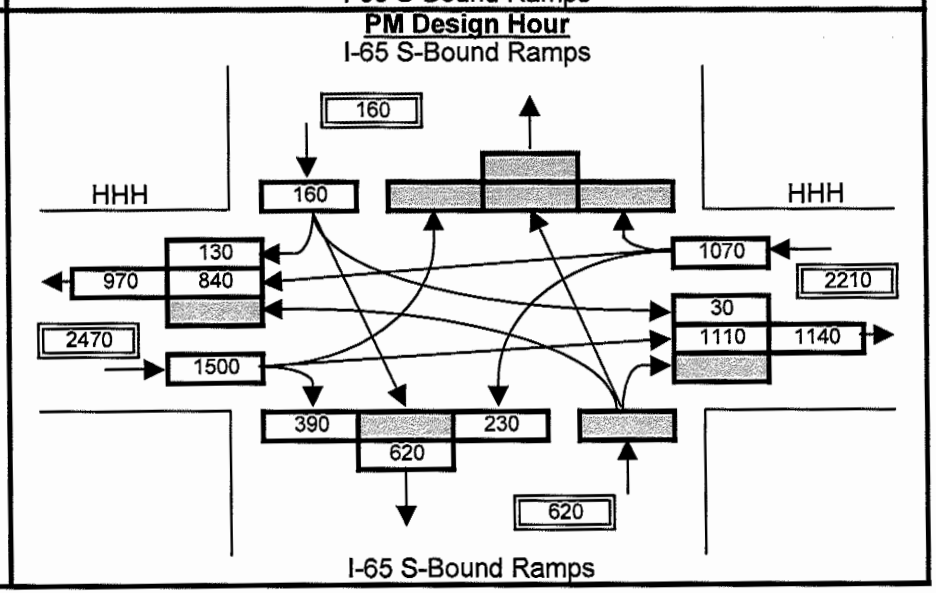

INDOT Traffic Forecasts
Analysis Date: Oct-06
Route: SR 25
City/County: Tippecanoe
Des. No.: 9802920
Subject: Turning Movement Analysis SR 25 at I-65 SB Ramps
Count Date: Jan-03

Passenger Cars	1 Southbound			2 Eastbound			3 Northbound			4 Westbound			
	SL	ST	SR	EL	ET	ER	NL	NT	NR	WL	WT	WR	Total
Time													
600													0
700													0
800	14		134		308	173				177	993		1799
900	11		92		244	118				129	618		1212
1000													0
1100													0
1200													0
1300													0
1400													0
1500													0
1600	11		103		695	304				146	471		1730
1700	21		109		843	301				125	552		1951
Subtotal-Cars:	57	0	438	0	2090	896	0	0	0	577	2634	0	6692

Trucks	1 Southbound			2 Eastbound			3 Northbound			4 Westbound			
	SL	ST	SR	EL	ET	ER	NL	NT	NR	WL	WT	WR	Total
Time													
600													0
700													0
800	6		11		89	12				20	50		188
900	10		18		73	16				6	33		156
1000													0
1100													0
1200													0
1300													0
1400													0
1500													0
1600	11		4		48	18				19	32		132
1700	2		3		32	11				14	17		79
Subtotal-Trucks:	29	0	36	0	242	57	0	0	0	59	132	0	555

AADT		SL	ST	SR		EL	ET	ER		NL	NT	NR		WL	WT	WR
Cars		57	0	438		0	2090	896		0	0	0		577	2634	0
Trucks		29	0	36		0	242	57		0	0	0		59	132	0
Total	560	86	0	474	3285	0	2332	953	0	0	0	0	3402	636	2766	0
Turning %		0.1536	0.0000	0.8464		0.0000	0.7099	0.2901		#####	#DIV/0!	#####		0.1869	0.8131	0.0000
%CV		0.3372	#####	0.0759		#####	0.1038	0.0598		#####	#DIV/0!	#####		0.0928	0.0477	#####

AM DHV		SL	ST	SR		EL	ET	ER		NL	NT	NR		WL	WT	WR
Cars		25	0	226		0	552	291		0	0	0		306	1611	0
Trucks		16	0	29		0	162	28		0	0	0		26	83	0
Total	296	41	0	255	1033	0	714	319	0	0	0	0	2026	332	1694	0
Turning %		0.1385	0.0000	0.8615		0.0000	0.6912	0.3088		#####	#DIV/0!	#####		0.1639	0.8361	0.0000
%CV		0.3902	#####	0.1137		#####	0.2269	0.0878		#####	#DIV/0!	#####		0.0783	0.0490	#####

PM DHV		SL	ST	SR		EL	ET	ER		NL	NT	NR		WL	WT	WR
Cars		32	0	212		0	1538	605		0	0	0		271	1023	0
Trucks		13	0	7		0	80	29		0	0	0		33	49	0
Total	264	45	0	219	2252	0	1618	634	0	0	0	0	1376	304	1072	0
Turning %		0.1705	0.0000	0.8295		0.0000	0.7185	0.2815		#####	#DIV/0!	#####		0.2209	0.7791	0.0000
%CV		0.2889	#####	0.0320		#####	0.0494	0.0457		#####	#DIV/0!	#####		0.1086	0.0457	#####

Seed Matrices for TMOVES:

	AADT				AM-DHV				PM-DHV		
	Left	Thru	Right		Left	Thru	Right		Left	Thru	Right
1	86	0	474	1	41	0	255	1	45	0	219
2	0	2332	953	2	0	714	319	2	0	1618	634
3	0	0	0	3	0	0	0	3	0	0	0
4	636	2766	0	4	332	1694	0	4	304	1072	0

$\bar{x}$ = 8/8/9

← 5/5/5

10/20/5 →

$\bar{x}$ = 8/17/5

FIGURE 1

Intersection	Hoosier Heartland Highway @ I-65 N-Bound Ramps
Jurisdiction	Indiana
Year/Time Period	2030 Design Hour

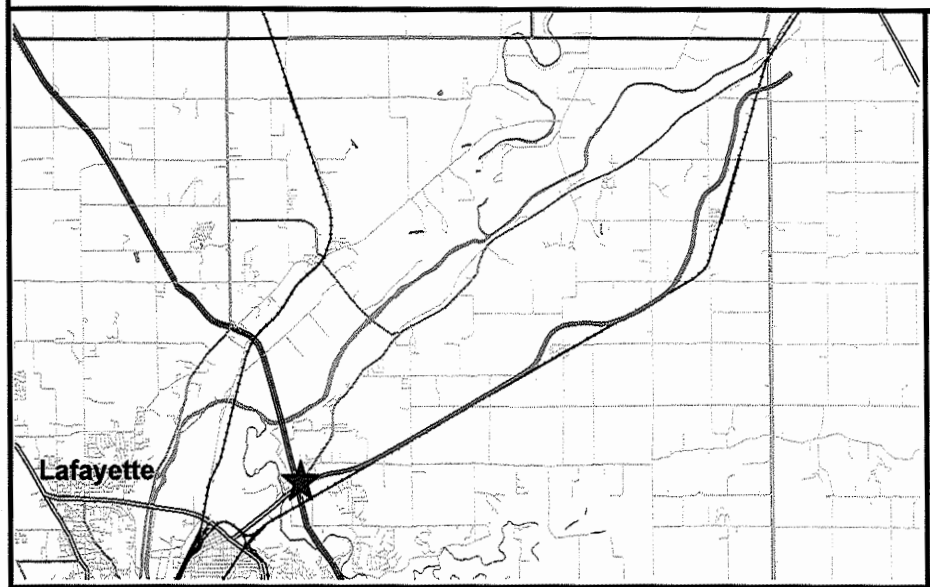

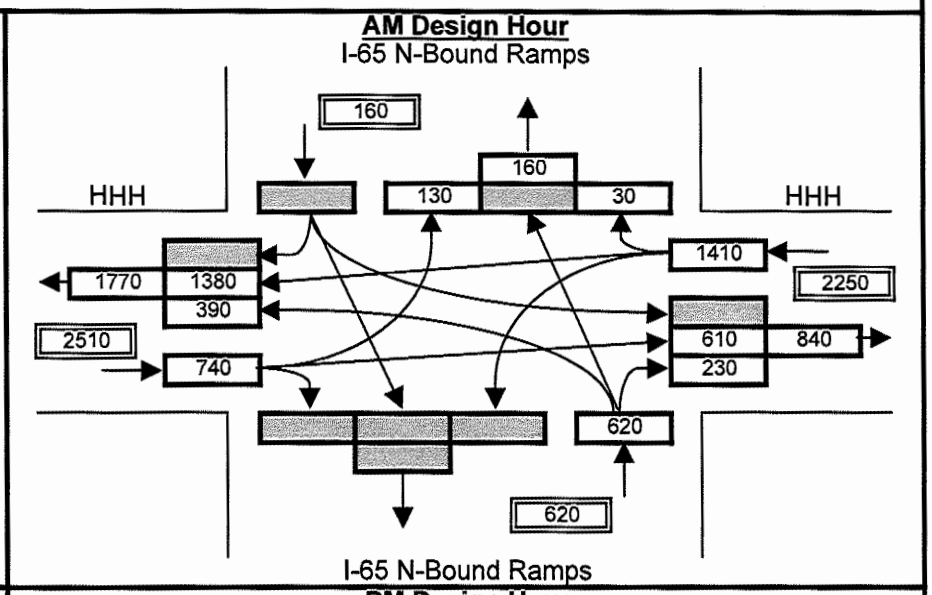

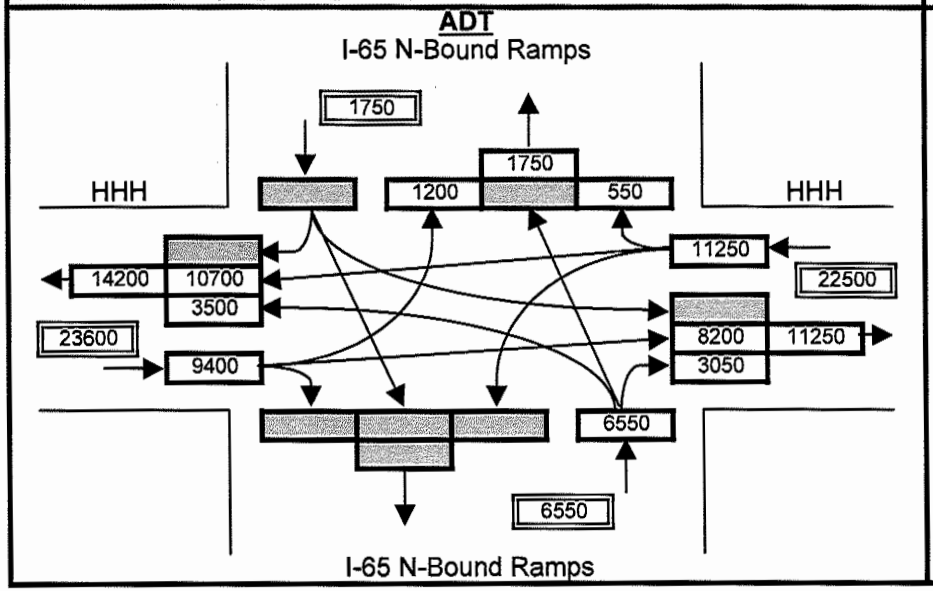

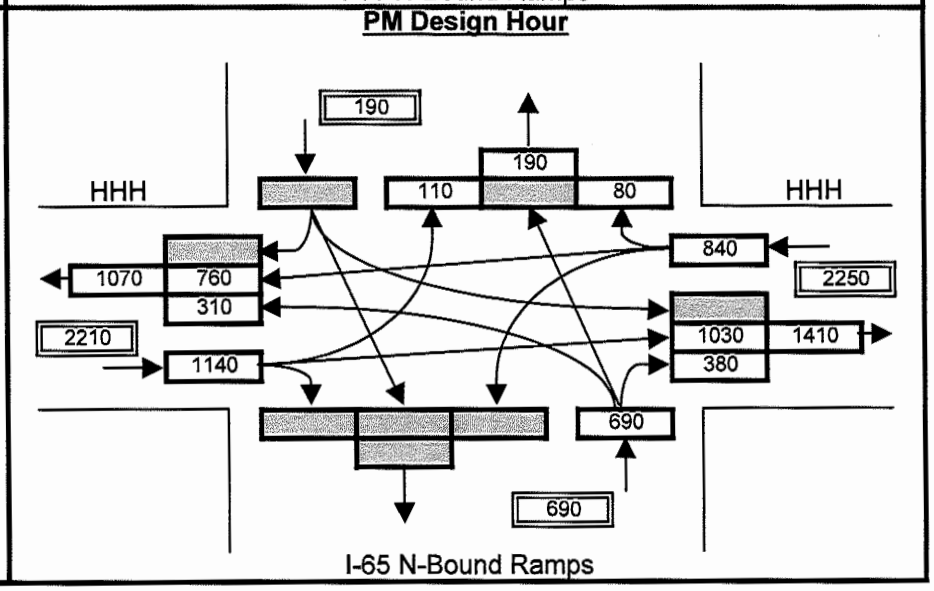

INDOT Traffic Forecasts
Analysis Date: Oct-06
Route: SR 25
City/County: Tippecanoe
Des. No.: 9802920
Subject: Turning Movement Analysis SR 25 at I-65 NB Ramps
Count Date: Jan-03

Passenger Cars	1 Southbound				2 Eastbound				3 Northbound				4 Westbound			
	SL	ST	SR		EL	ET	ER		NL	NT	NR		WL	WT	WR	Total
Time																
600																0
700																0
800					94	236			305		91			895	82	1703
900					56	185			210		60			585	26	1122
1000																0
1100																0
1200																0
1300																0
1400																0
1500																0
1600					145	591			183		257			427	40	1643
1700					156	644			182		209			458	39	1688
Subtotal-Cars:		0	0	0	451	1656	0		880	0	617		0	2365	187	6156

Trucks	1 Southbound				2 Eastbound				3 Northbound				4 Westbound			
	SL	ST	SR		EL	ET	ER		NL	NT	NR		WL	WT	WR	Total
Time																
600																0
700																0
800					12	35			16		16			73	7	159
900					14	41			26		26			51	3	161
1000																0
1100																0
1200																0
1300																0
1400																0
1500																0
1600					15	52			15		28			66	7	183
1700					3	16			12		19			38	1	89
Subtotal-Trucks:		0	0	0	44	144	0		69	0	89		0	228	18	592

AADT		SL	ST	SR		EL	ET	ER		NL	NT	NR		WL	WT	WR
Cars		0	0	0		451	1656	0		880	0	617		0	2365	187
Trucks		0	0	0		44	144	0		69	0	89		0	228	18
Total	0	0	0	0	2295	495	1800	0	1655	949	0	706	2798	0	2593	205
Turning %		#####	#####	#####		0.2157	0.7843	0.0000		0.5734	0.0000	0.4266		0.0000	0.9267	0.0733
%CV		#####	#####	#####		0.0889	0.0800	#####		0.0727	#DIV/0!	0.1261		#####	0.0879	0.0878

AM DHV		SL	ST	SR		EL	ET	ER		NL	NT	NR		WL	WT	WR
Cars		0	0	0		150	421	0		515	0	151		0	1480	108
Trucks		0	0	0		26	76	0		42	0	42		0	124	10
Total	0	0	0	0	673	176	497	0	750	557	0	193	1722	0	1604	118
Turning %		#####	#####	#####		0.2615	0.7385	0.0000		0.7427	0.0000	0.2573		0.0000	0.9315	0.0685
%CV		#####	#####	#####		0.1477	0.1529	#####		0.0754	#DIV/0!	0.2176		#####	0.0773	0.0847

PM DHV		SL	ST	SR		EL	ET	ER		NL	NT	NR		WL	WT	WR
Cars		0	0	0		301	1235	0		365	0	466		0	885	79
Trucks		0	0	0		18	68	0		27	0	47		0	104	8
Total	0	0	0	0	1622	319	1303	0	905	392	0	513	1076	0	989	87
Turning %		#####	#####	#####		0.1967	0.8033	0.0000		0.4331	0.0000	0.5669		0.0000	0.9191	0.0809
%CV		#####	#####	#####		0.0564	0.0522	#####		0.0689	#DIV/0!	0.0916		#####	0.1052	0.0920

Seed Matrices for TMOVES:

	AADT				AM-DHV				PM-DHV		
	Left	Thru	Right		Left	Thru	Right		Left	Thru	Right
1	0	0	0	1	0	0	0	1	0	0	0
2	495	1800	0	2	176	497	0	2	319	1303	0
3	949	0	706	3	557	0	193	3	392	0	513
4	0	2593	205	4	0	1604	118	4	0	989	87

← 9/8/11

8/15/5 →

Des. No. 9802920

Andrews, Ted

From: Black, Beckie (INDOT) [BBLACK@indot.IN.gov]
Sent: Friday, September 22, 2006 12:07 PM
To: Andrews, Ted
Subject: FW: Hoosier Heartland projections, turning movements and peak hour stuff
Attachments: HH South Intersection AM Peak.pdf; HH North Intersection 24 HR.pdf; HH North Intersection PM Peak.pdf; HH North Intersection AM Peak.pdf; HH South Intersection 24 HR.pdf; HH South Intersection PM Peak.pdf

Ted, here is a Friday afternoon present from Doug Poad.

Beckie Black
Senior Forecast Technician
(317) 233-1057

-----Original Message-----
From: Doug Poad [mailto:DPoad@tippecanoe.in.gov]
Sent: Friday, September 22, 2006 1:04 PM
To: Black, Beckie (INDOT)
Subject: Hoosier Heartland projections, turning movements and peak hour stuff

Beckie:

Attached you will find six maps. Two of the maps show 24 hour volumes. One is for the northern two intersections at the Tippecanoe/Carroll County line and the other is for the southern intersection just east of I-65. The other four maps show am and pm peak hour turning movements for all three intersections.

The 24 hour volumes are from our 2025 transportation model. The turning movements were calculated from TMOVES. The peak hour percentages and volumes are based on peak hour volume counts INDOT recorded last year when conducting the county-wide (Tippecanoe County) coverage counts.

Please email or call if you need any additional data.

Doug

Doug Poad
Senior Planner – Transportation
Area Plan Commission of Tippecanoe County
20 North 3rd Street
Lafayette, IN 47901
(765) 423-9242

Projected 2025 Turning Movements
For Hoosier Heartland, and Existing SR 25
(South Intersection)

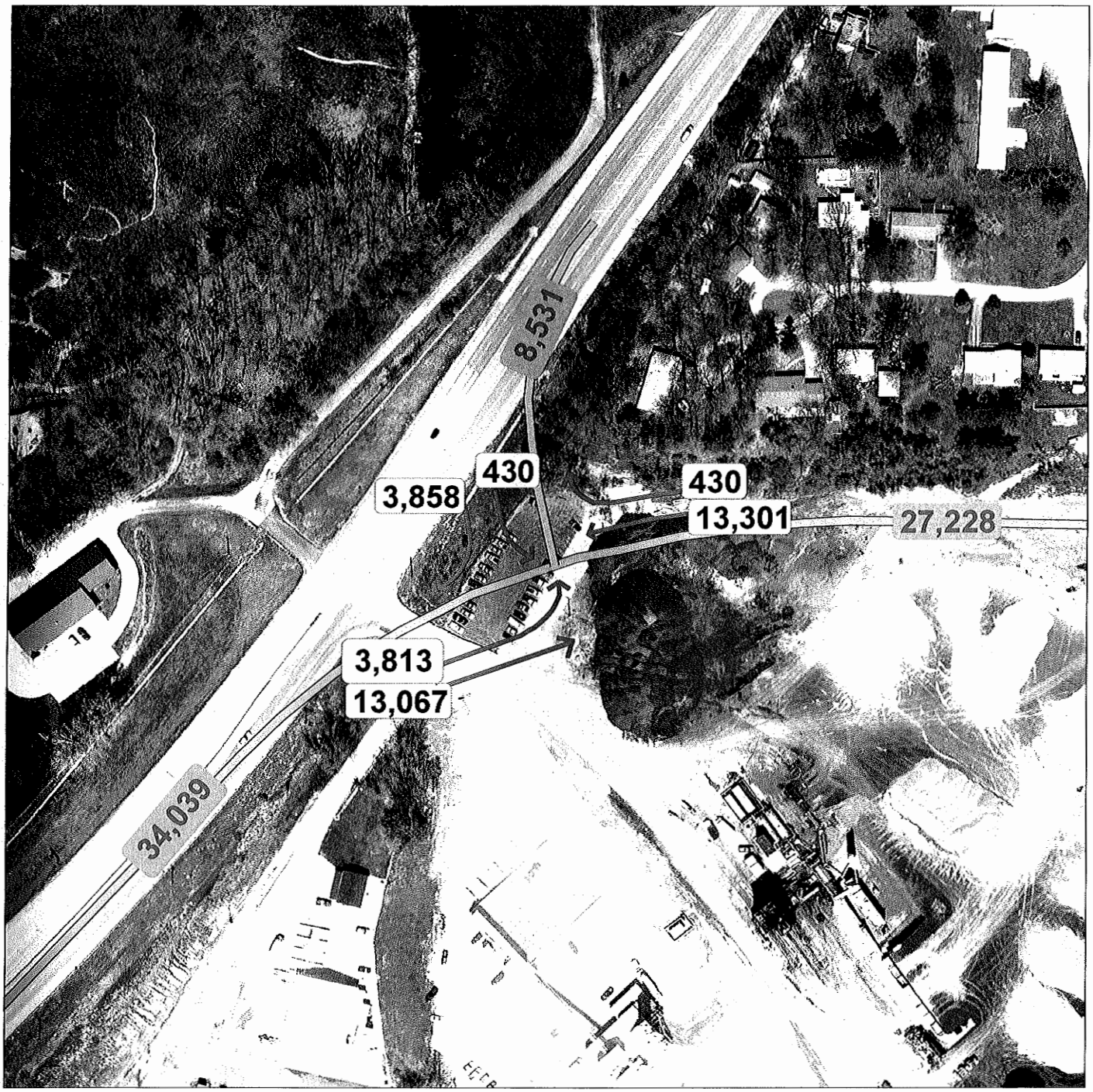

Prepared by the Area Plan Commission of Tippecanoe County, September 21, 2006

Projected 2025 Turning Movements
For Hoosier Heartland, and Existing SR 25
(South Intersection)

AM Peak

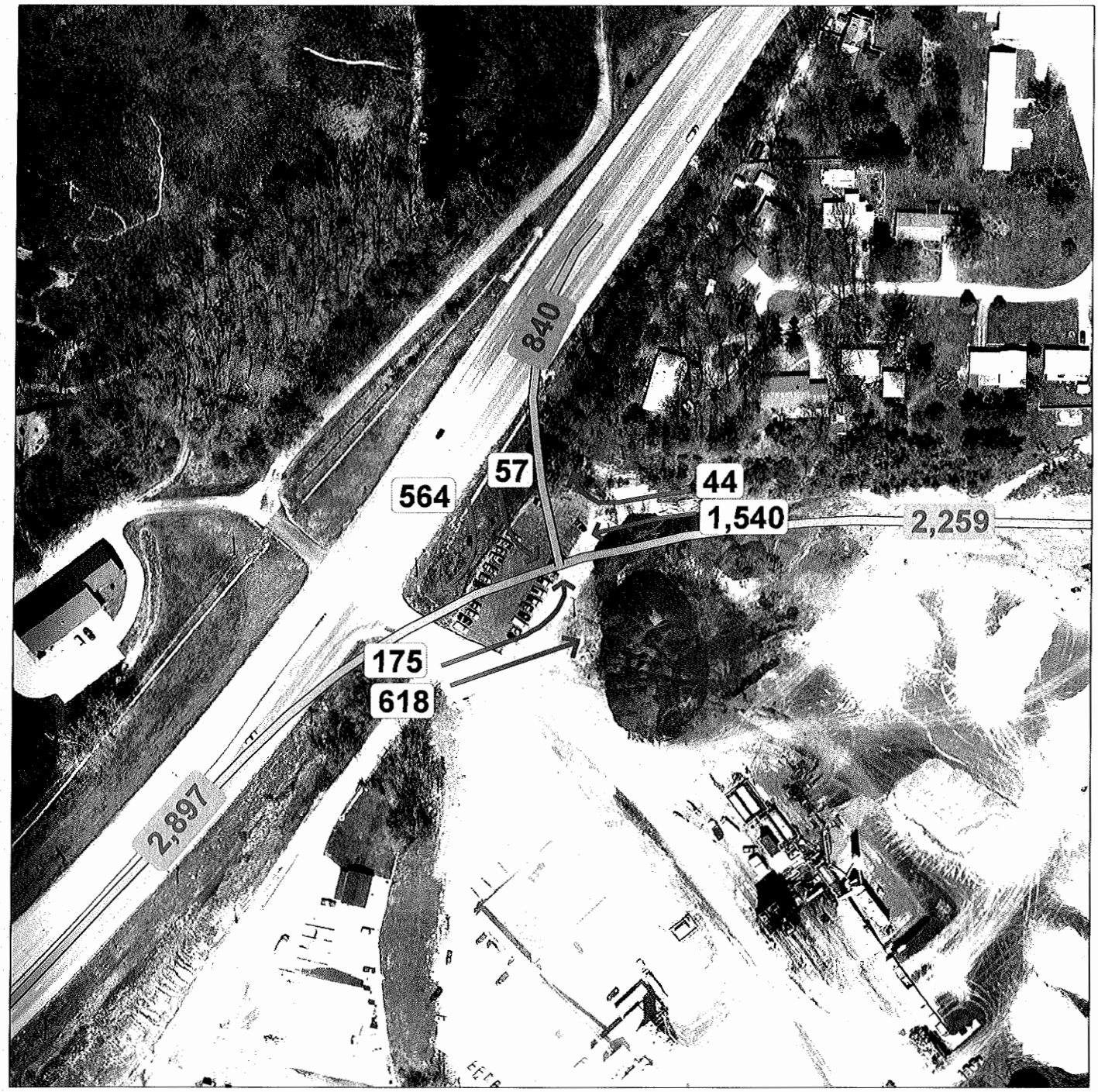

Prepared by the Area Plan Commission of Tippecanoe County, September 21, 2006

Projected 2025 Turning Movements
For Hoosier Heartland, and Existing SR 25
(South Intersection)

PM Peak

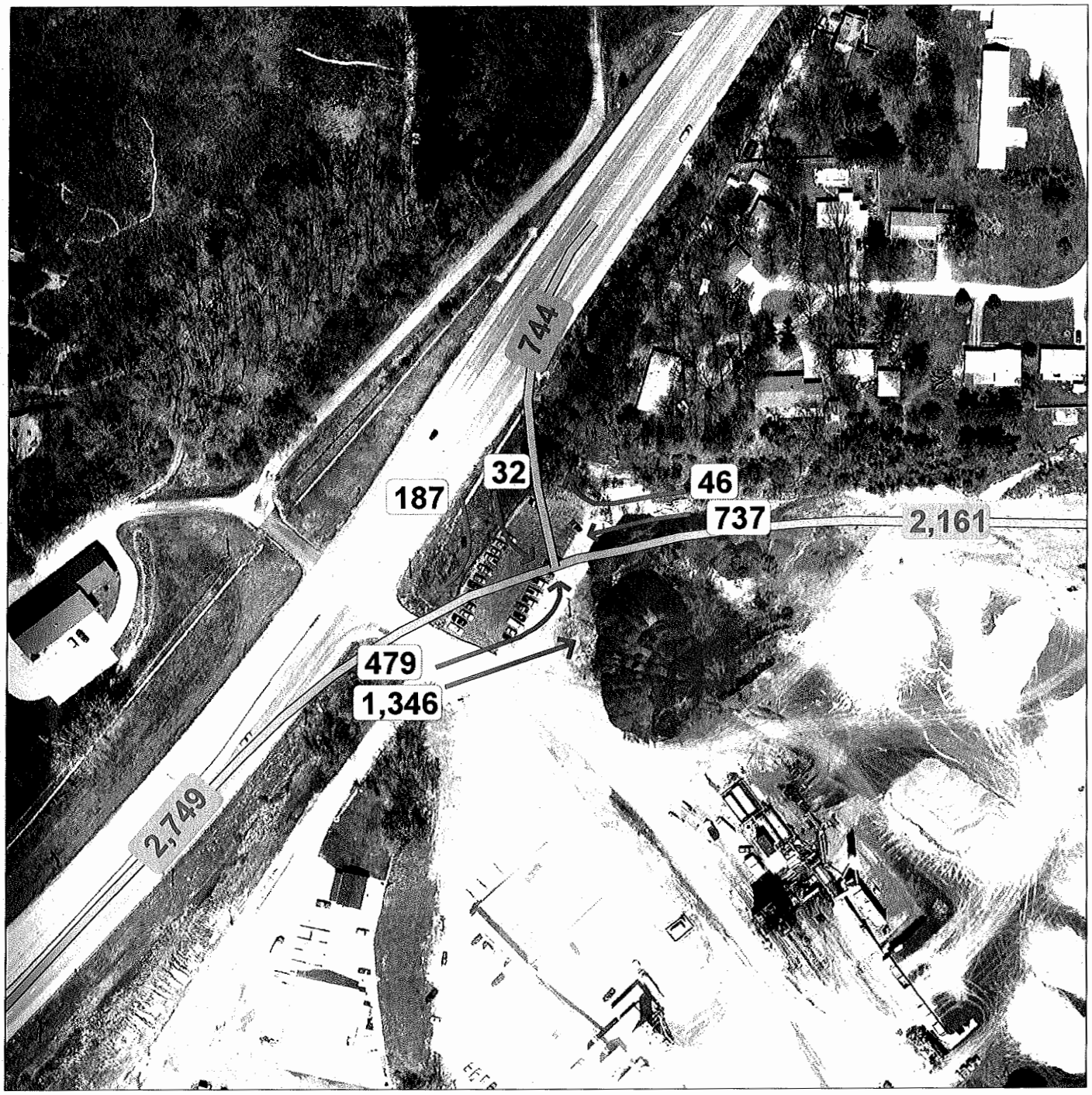

Prepared by the Area Plan Commission of Tippecanoe County, September 21, 2006

Projected 2025 Turning Movements
For Hoosier Heartland, Existing SR 25, and Connector
(North Intersection)

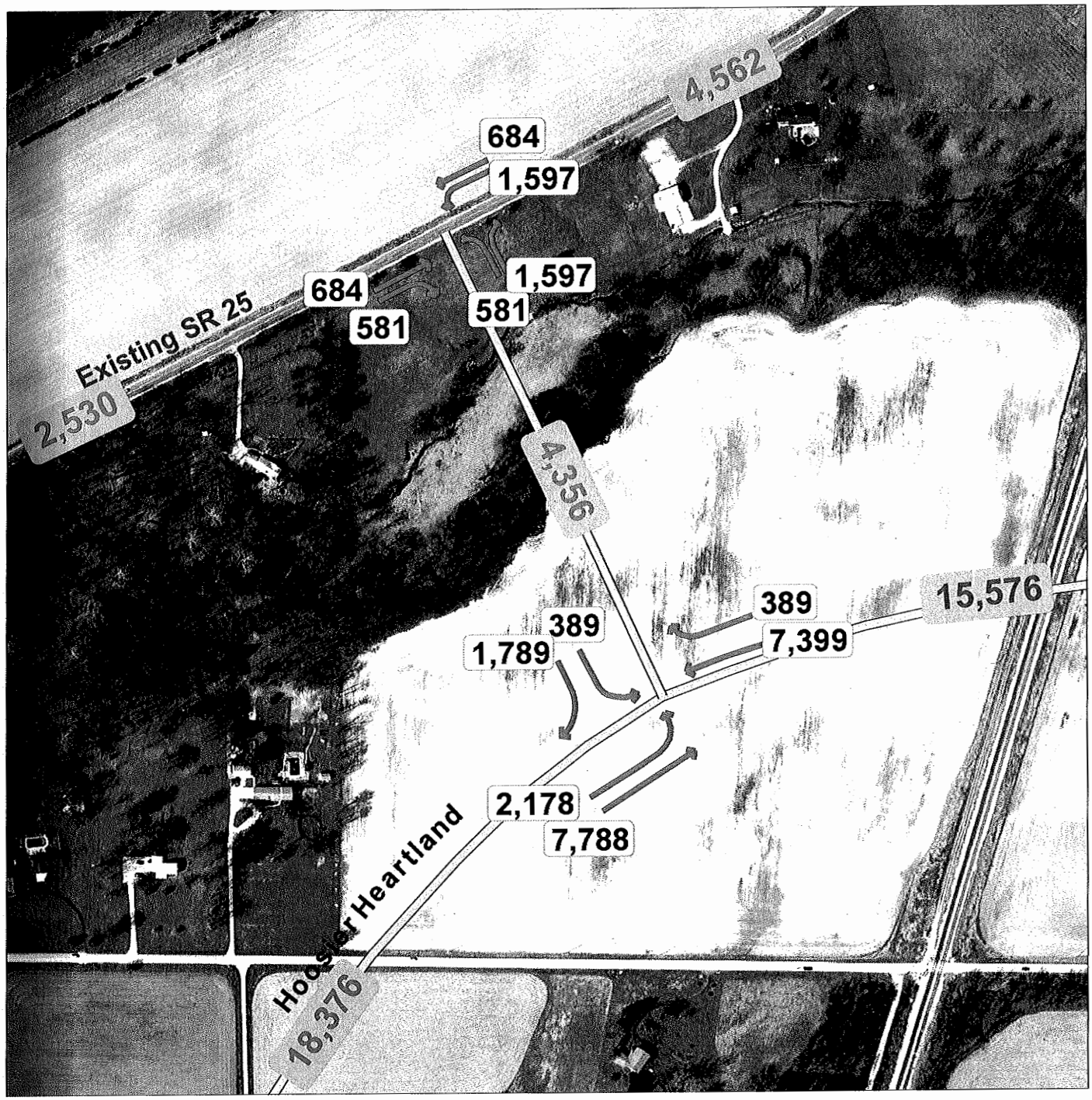

Prepared by the Area Plan Commission of Tippecanoe County, September 21, 2006

Projected 2025 Turning Movements
For Hoosier Heartland, Existing SR 25, and Connector
(North Intersection)

AM Peak Hour

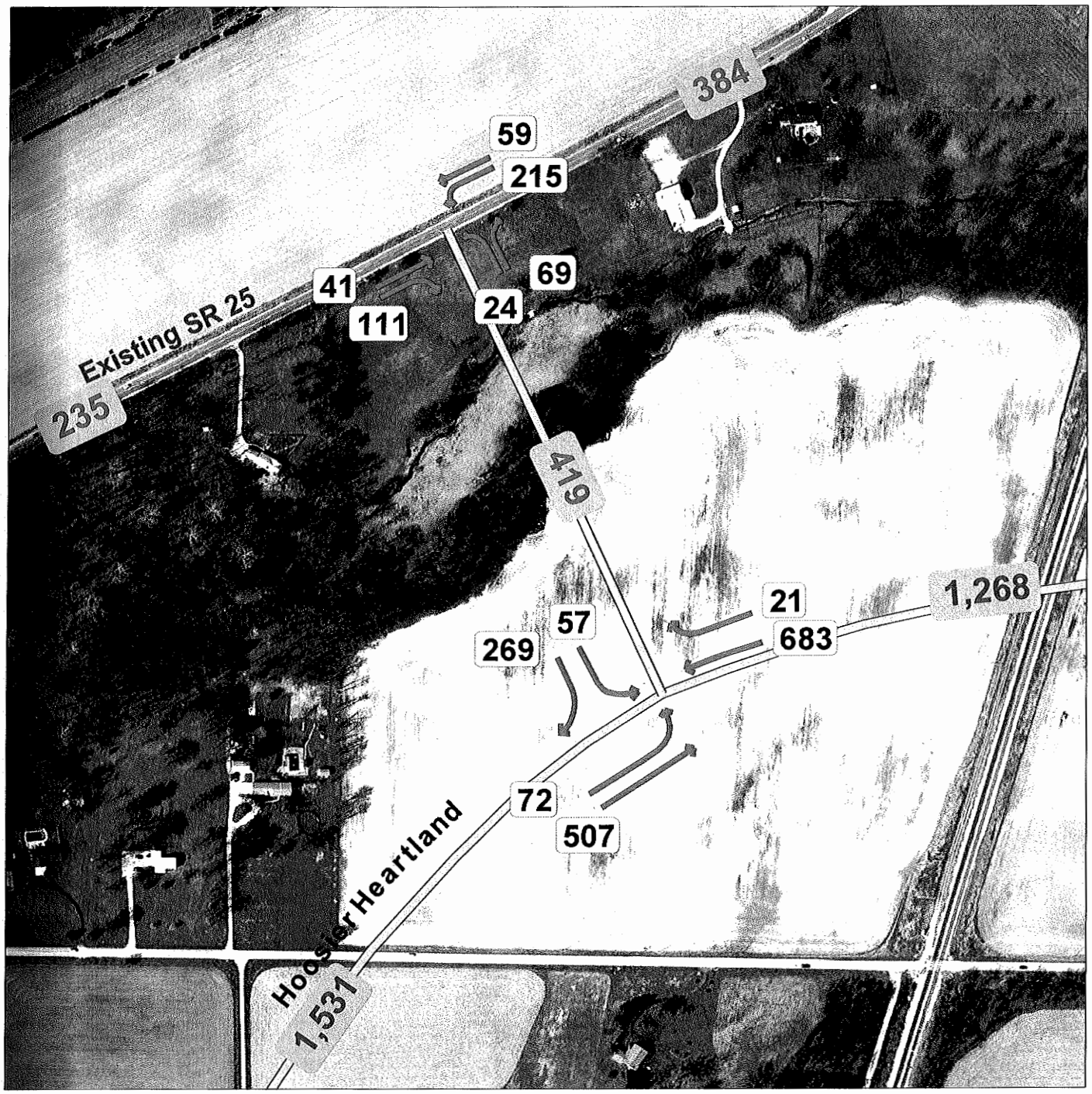

Prepared by the Area Plan Commission of Tippecanoe County, September 21, 2006

Projected 2025 Turning Movements
For Hoosier Heartland, Existing SR 25, and Connector
(North Intersection)

PM Peak Hour

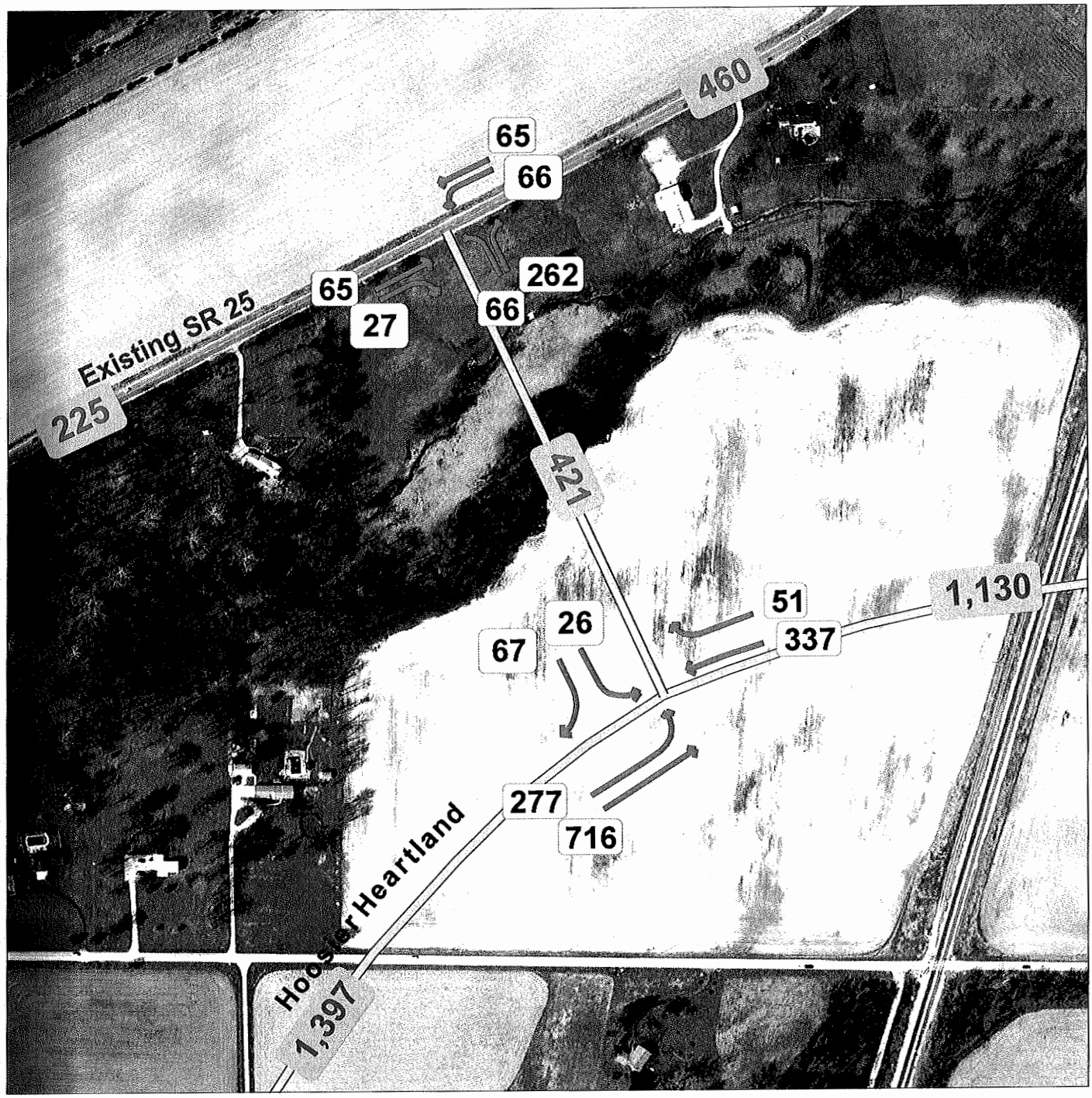

Prepared by the Area Plan Commission of Tippecanoe County, September 21, 2006

CTE ENGINEERS CONSOER TOWNSEND ENVIRODYNE ENGINEERS, INC.	PROJECT INDOT FORECASTING			JOB NO.
	SUBJECT HHH @ SR 25 CONNECTOR AADT DERIVATION			SHEET
	DESIGNED TMA	DATE 11/2/06	CHECKED	DATE

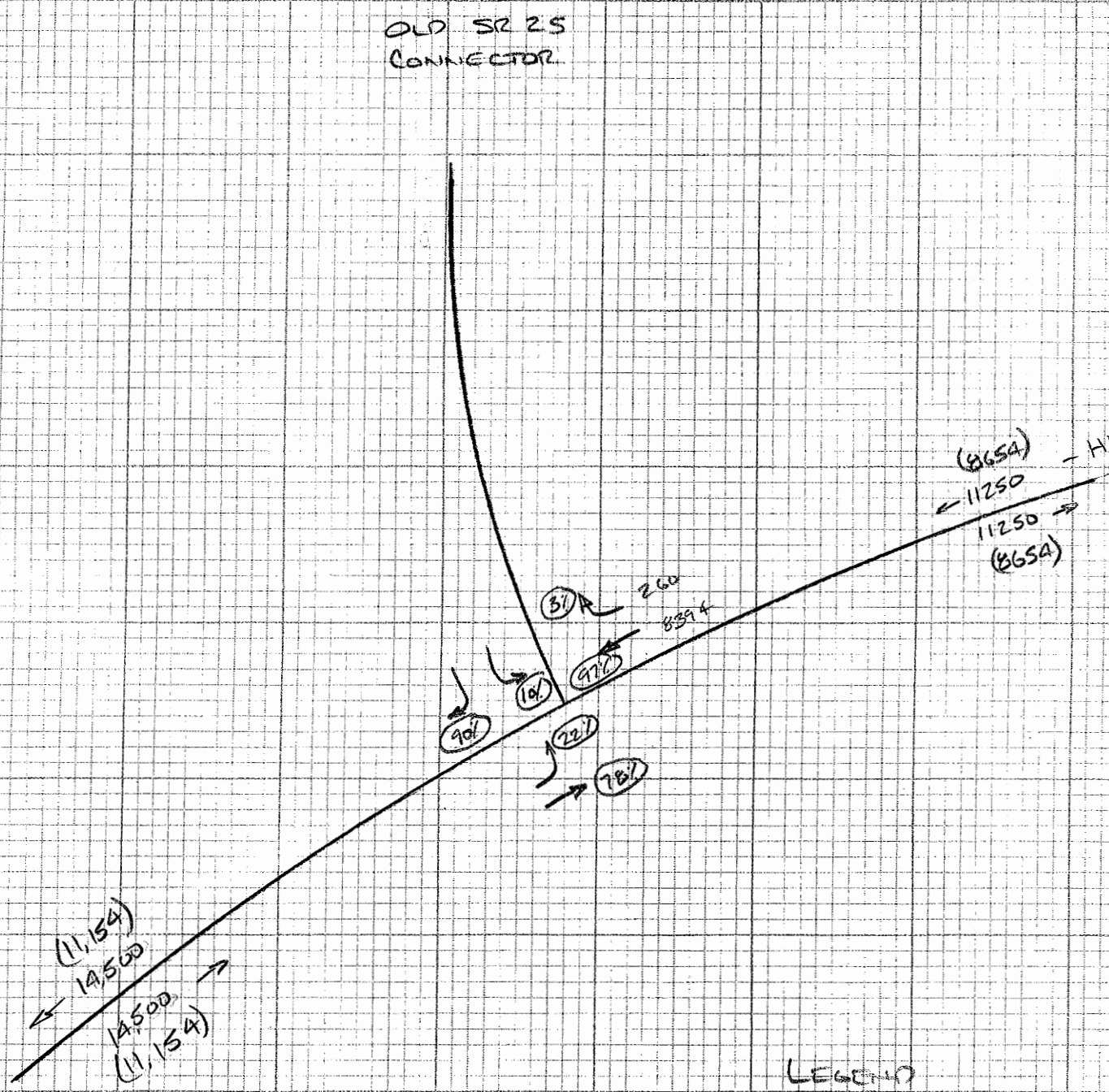

LEGEND

XXX: 2030 BASE VOLUME

(XXX): 2006 ADJUSTED VOLUME

(XX%): TURNING % (TRAPC)

CTE ENGINEERS CONSOER TOWNSEND ENVIRODYNE ENGINEERS, INC.	PROJECT INDOT FORECASTING			JOB NO.
	SUBJECT HHH @ SR 25 CONNECTOR AM - DHV DERIVATION			SHEET
	DESIGNED TMA	DATE 11/2/06	CHECKED	DATE

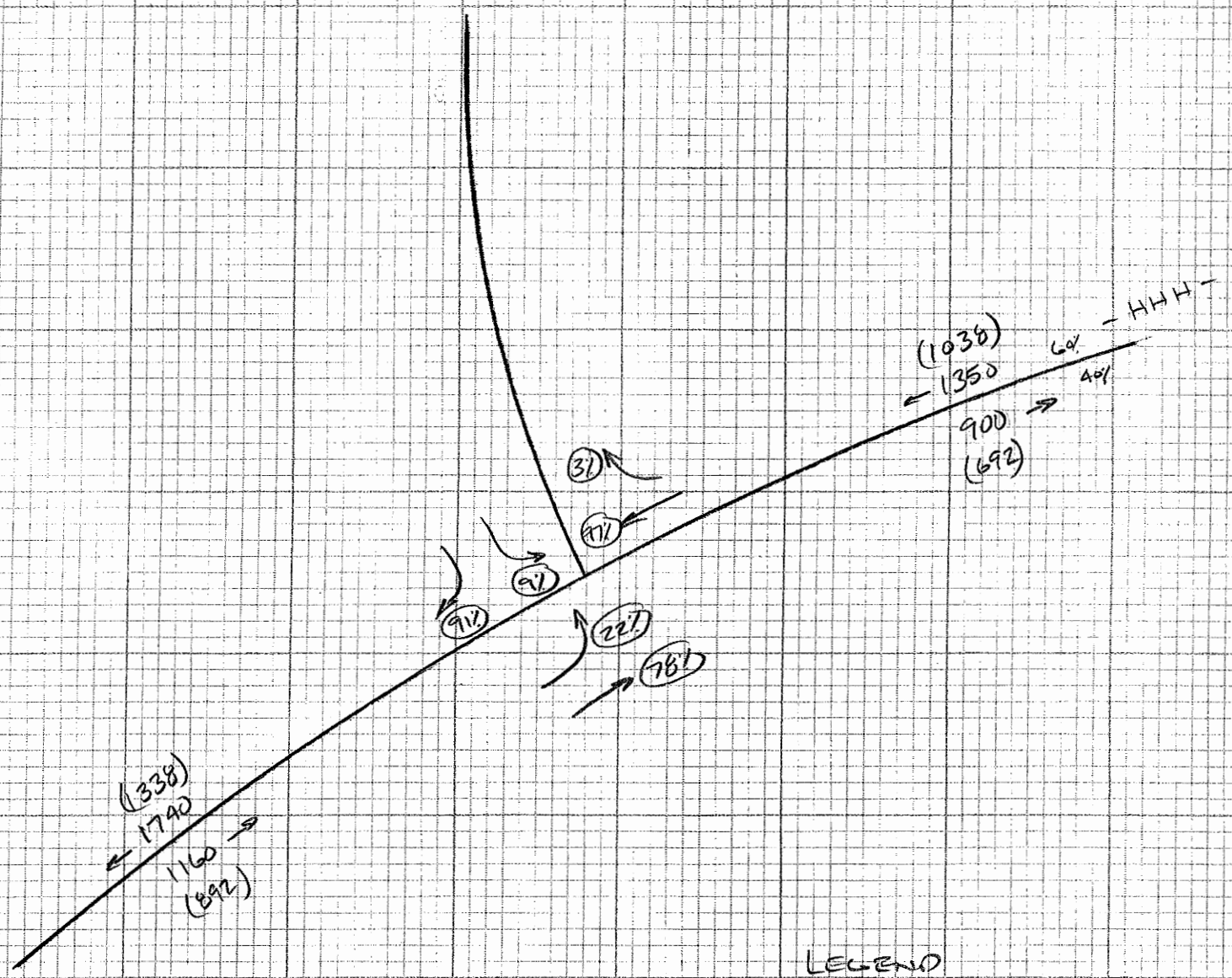

LEGEND

XXX: 2030 BASE VOLUMES

(XXX): 2006 ADJUSTED VOLUMES

XX%: TURNING % (TCAPS)

CTE ENGINEERS CONSOER TOWNSEND ENVIRODYNE ENGINEERS, INC.	PROJECT INDOT FORECASTING			JOB NO.
	SUBJECT HHH @ SR 25 CONNECTOR PM-DHV DERIVATION			SHEET
	DESIGNED TMA	DATE 11/2/06	CHECKED	DATE

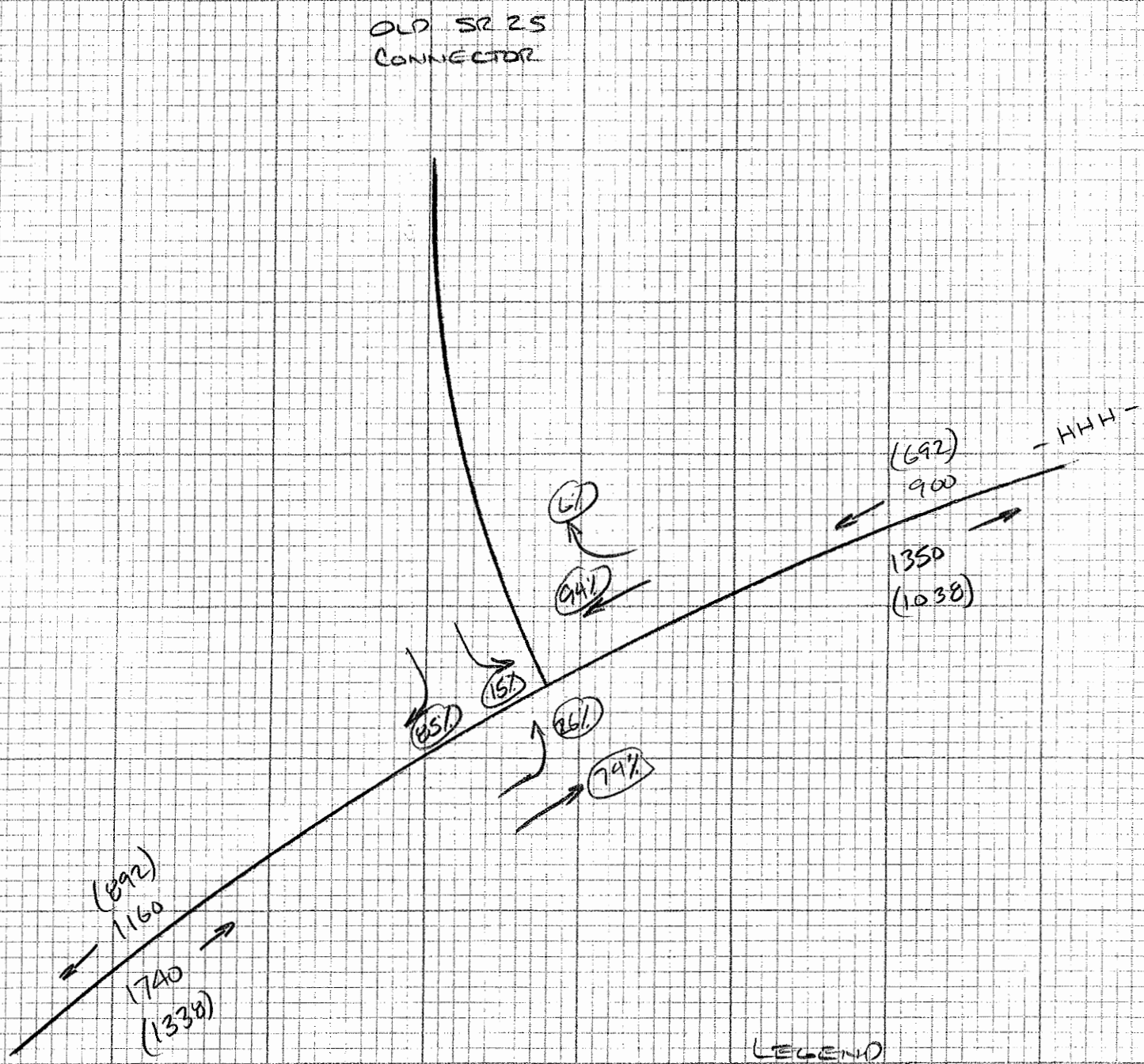

LEGEND

XXX: 2030 BASE VOLUMES

(XXX): 2006 ADJUSTED VOLUMES

XX%: TURNING %'S (TCAPC)

HHH AT SR 25 CONNECTOR
AADT TURNING PATTERNS

APPROACHES ARE NUMBERED COUNTERCLOCKWISE. APPROACH 1 IS:
SR 25 CONNECTOR

SEED (INPUT DIRECTLY):

ENTERING VIA	LEFT	STRAIGHT	RIGHT
1	10.00	-1.00	90.00
2	22.000	78.000	-1.000
3	-1.00	-1.00	-1.00
4	-1.000	97.000	3.000

APPROACH:	1	2	3	4
ENTERING VOLUMES:	-99.00	11154.00	.00	8654.00
LEAVING VOLUMES:	-99.00	11154.00	.00	8654.00

BIPROPORTIONAL ESTIMATES:

ENTERING VIA	LEFT	STRAIGHT	RIGHT	TOTAL	LEFT	STRAIGHT	RIGHT
1	579.680	.000	3071.539	3651.219	.159	.000	.841
2	3080.149	8073.852	.000	11154.000	.276	.724	.000
3	.000	.000	.000	.000	.200	.460	.340
4	.000	8079.893	574.106	8653.999	.000	.934	.066

LEAVING VIA	LEFT	STRAIGHT	RIGHT	TOTAL	LEFT	STRAIGHT	RIGHT
1	3080.149	.000	574.106	3654.255	.843	.000	.157
2	.000	8079.893	3071.539	11151.430	.000	.725	.275
3	.000	.000	.000	.000	.467	.191	.342
4	579.680	8073.852	.000	8653.531	.000	.934	.066

HHH AT SR 25 CONNECTOR
AM DHV TURNING PATTERNS

APPROACHES ARE NUMBERED COUNTERCLOCKWISE. APPROACH 1 IS:
SR 25 CONNECTOR

SEED (INPUT DIRECTLY):

ENTERING VIA	LEFT	STRAIGHT	RIGHT
1	9.00	-1.00	91.00
2	22.000	78.000	-1.000
3	-1.00	-1.00	-1.00
4	-1.000	97.000	3.000

APPROACH:	1	2	3	4
ENTERING VOLUMES:	-99.00	892.00	.00	1038.00
LEAVING VOLUMES:	-99.00	1338.00	.00	692.00

BIPROPORTIONAL ESTIMATES:

ENTERING VIA	LEFT	STRAIGHT	RIGHT	TOTAL	LEFT	STRAIGHT	RIGHT
1	50.766	.000	359.517	410.283	.124	.000	.876
2	250.802	641.198	.000	892.000	.281	.719	.000
3	.000	.000	.000	.000	.227	.449	.324
4	.000	978.104	59.896	1038.000	.000	.942	.058

LEAVING VIA	LEFT	STRAIGHT	RIGHT	TOTAL	LEFT	STRAIGHT	RIGHT
1	250.802	.000	59.896	310.698	.807	.000	.193
2	.000	978.104	359.517	1337.621	.000	.731	.269
3	.000	.000	.000	.000	.509	.200	.291
4	50.766	641.198	.000	691.963	.000	1.414	.087

HHH AT SR 25 CONNECTOR
PM DHV TURNING PATTERNS

APPROACHES ARE NUMBERED COUNTERCLOCKWISE. APPROACH 1 IS:
SR 25 CONNECTOT

SEED (INPUT DIRECTLY):

ENTERING VIA	LEFT	STRAIGHT	RIGHT
1	15.00	-1.00	85.00
2	26.000	74.000	-1.000
3	-1.00	-1.00	-1.00
4	-1.000	94.000	6.000

APPROACH:	1	2	3	4
ENTERING VOLUMES:	-99.00	1338.00	.00	692.00
LEAVING VOLUMES:	-99.00	892.00	.00	1038.00

BIPROPORTIONAL ESTIMATES:

ENTERING VIA	LEFT	STRAIGHT	RIGHT	TOTAL	LEFT	STRAIGHT	RIGHT
1	99.962	.000	290.625	390.588	.256	.000	.744
2	400.074	937.926	.000	1338.000	.299	.701	.000
3	.000	.000	.000	.000	.188	.445	.367
4	.000	601.197	90.803	692.000	.000	.869	.131

LEAVING VIA	LEFT	STRAIGHT	RIGHT	TOTAL	LEFT	STRAIGHT	RIGHT
1	400.074	.000	90.803	490.878	.815	.000	.185
2	.000	601.197	290.625	891.822	.000	.674	.326
3	.000	.000	.000	.000	.392	.210	.399
4	99.962	937.926	.000	1037.888	.000	.579	.087

FIGURE 1

Intersection	Hoosier Heartland Highway @ CR 300 N
Jurisdiction	Indiana
Year/Time Period	2030 Design Hour

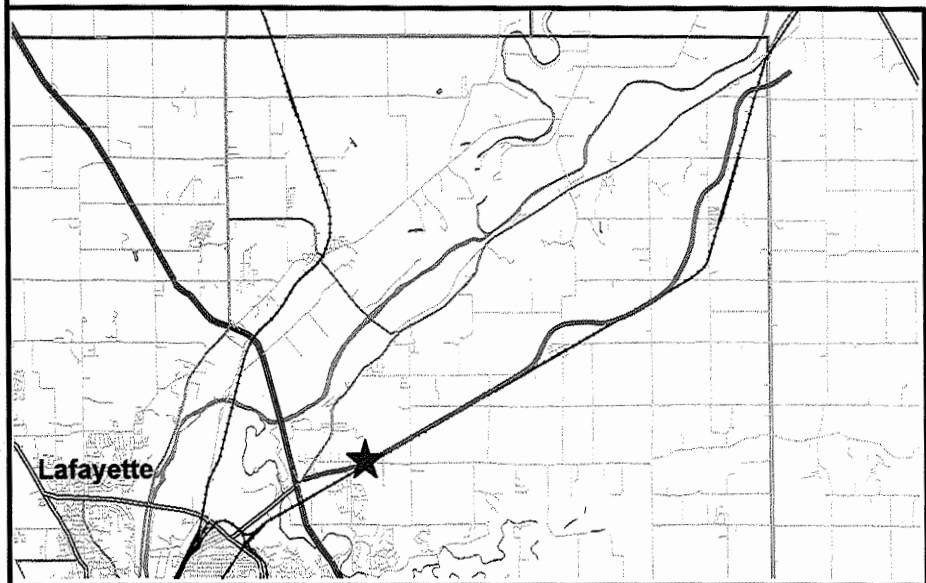

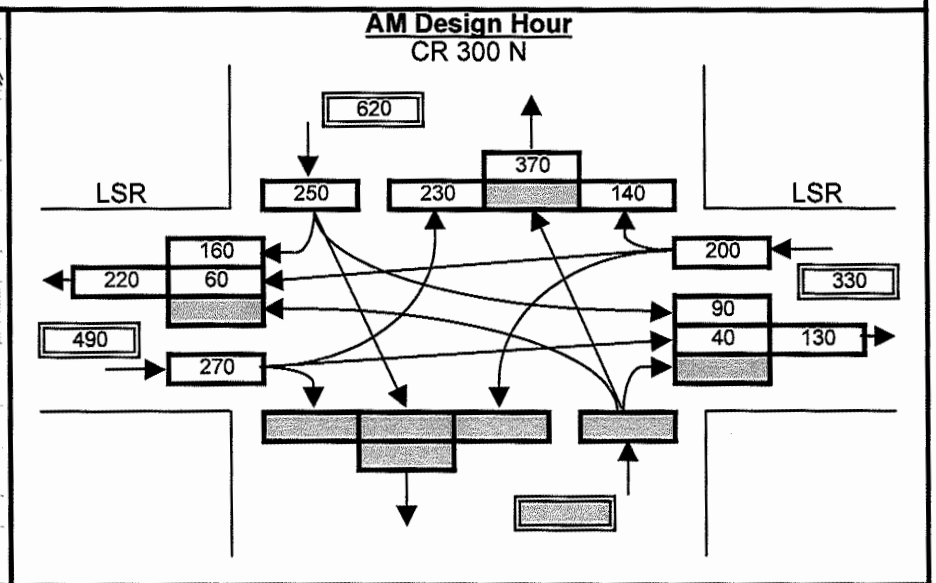

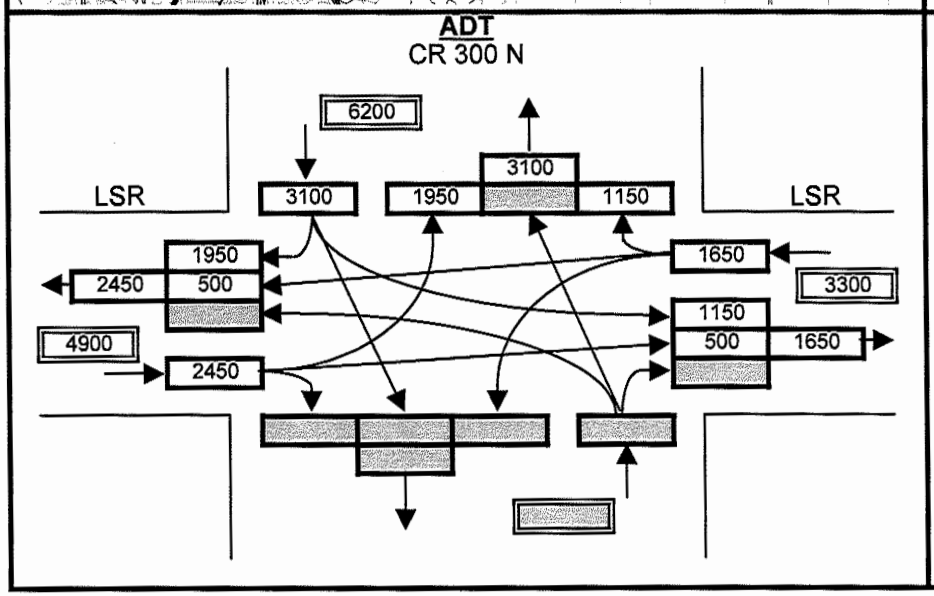

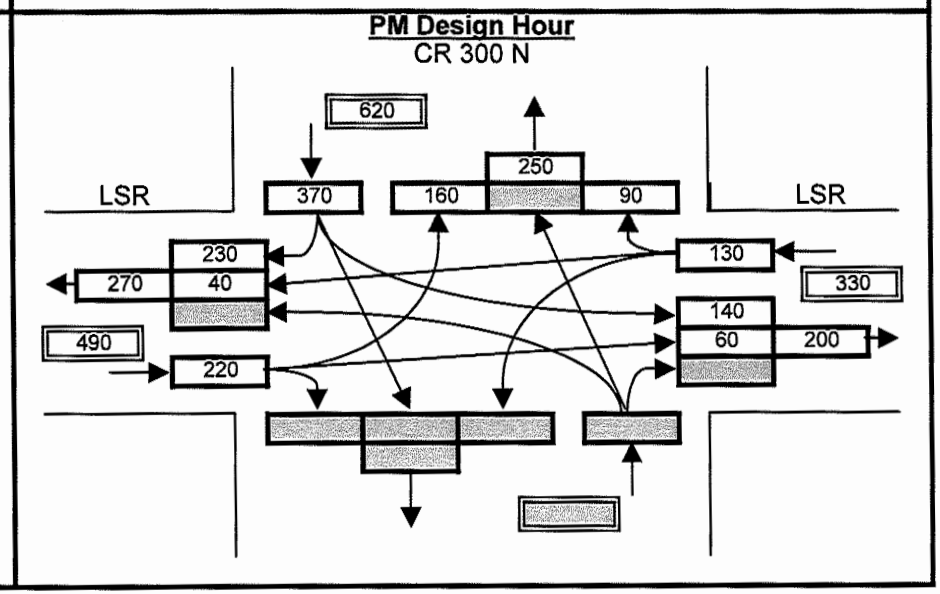

FIGURE 1

Intersection	Hoosier Heartland Highway @ CR 500 E
Jurisdiction	Indiana
Year/Time Period	2030 Design Hour

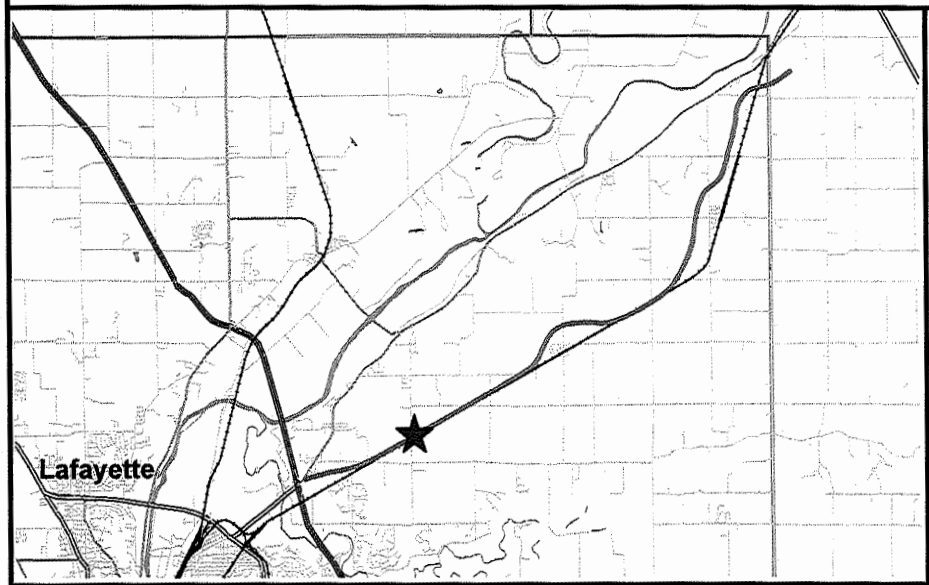

AM Design Hour

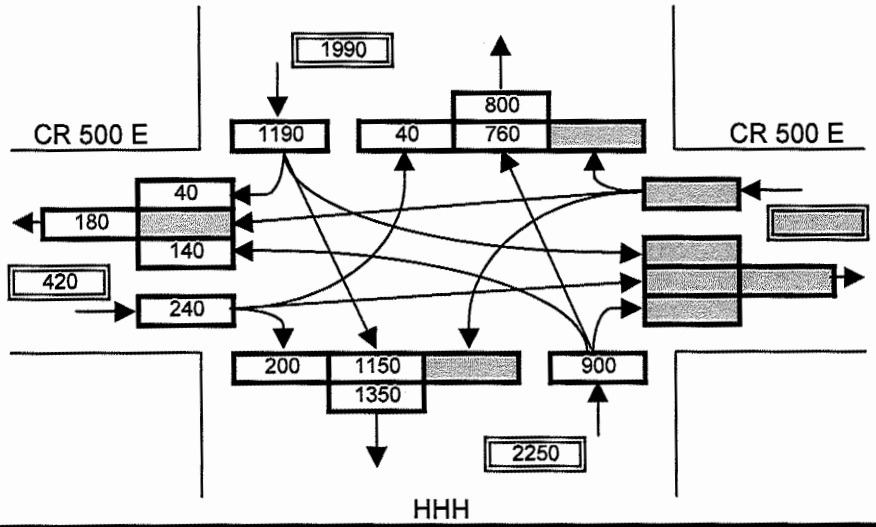

ADT

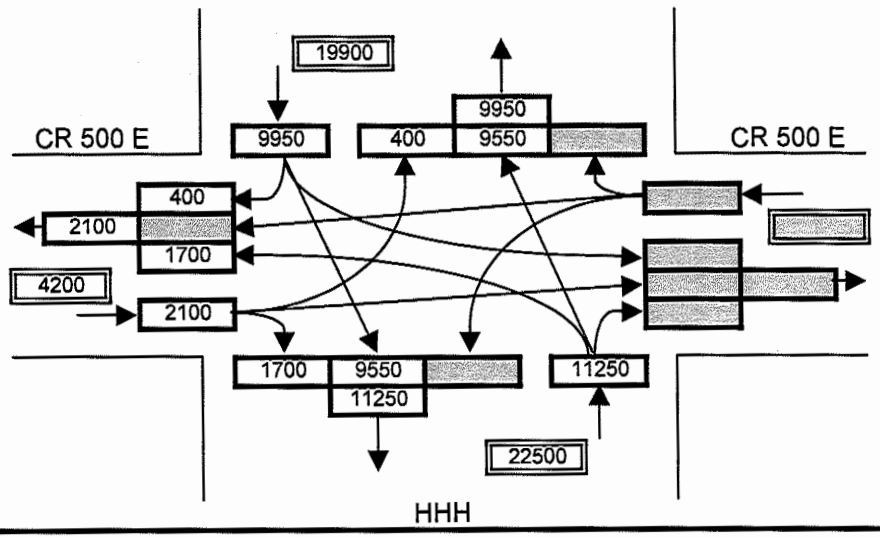

PM Design Hour

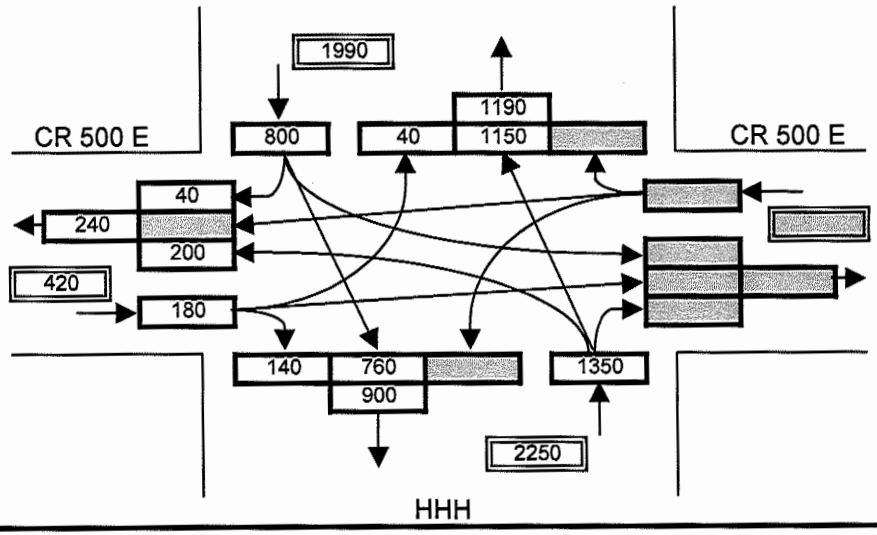

FIGURE X

Intersection	CR 500 E Connector @ CR 500 E
Jurisdiction	Indiana
Year/Time Period	2030 Design Hour

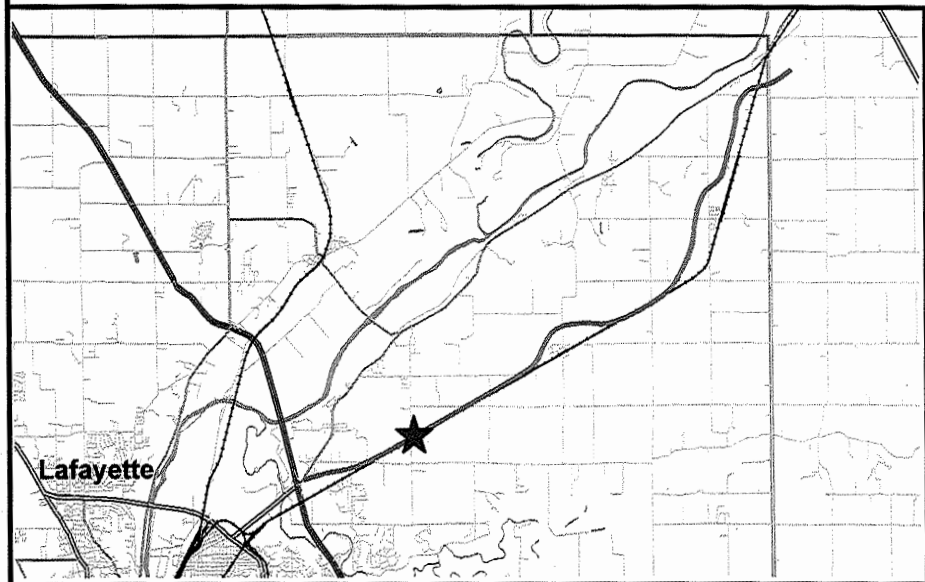

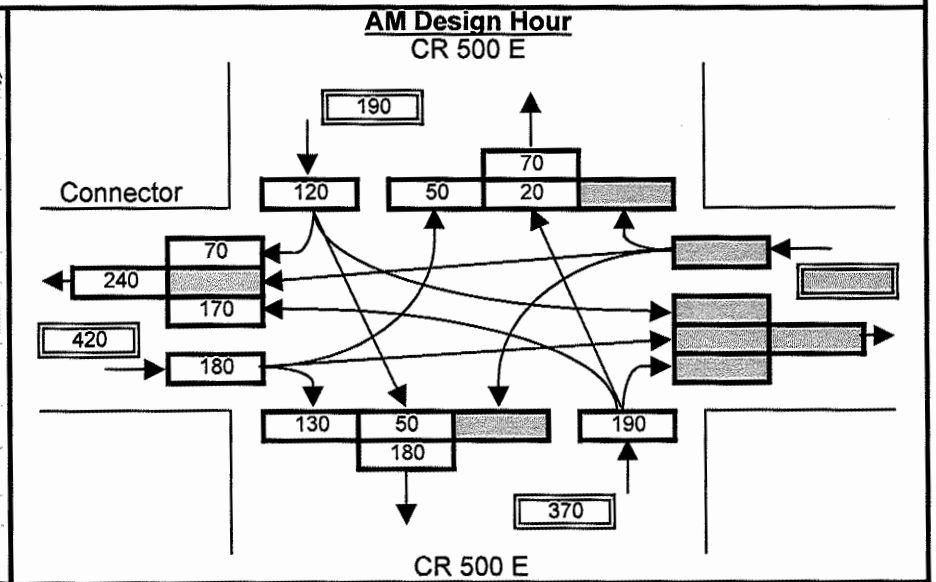

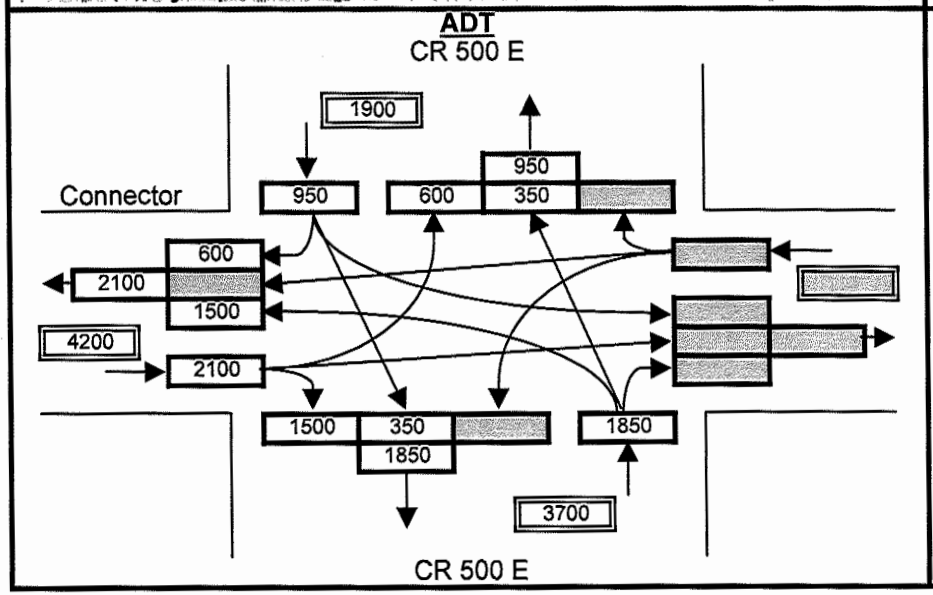

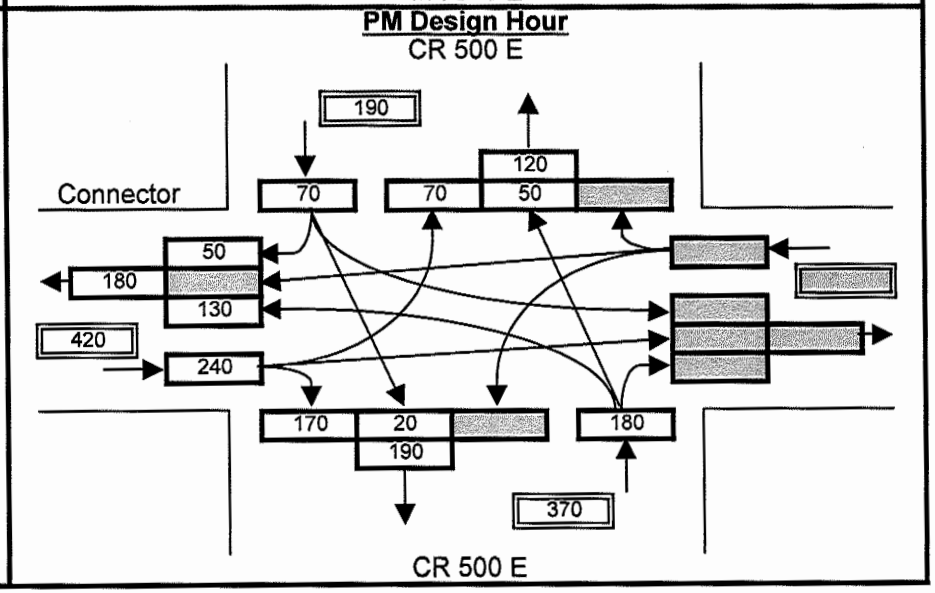

FIGURE 1

Intersection	Hoosier Heartland Highway @ CR 450 N
Jurisdiction	Indiana
Year/Time Period	2030 Design Hour

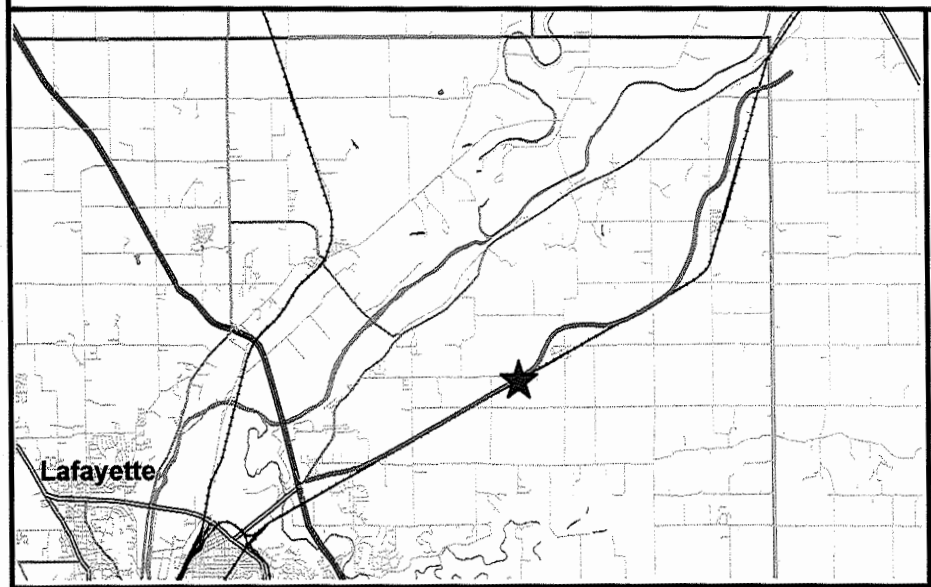

AM Design Hour

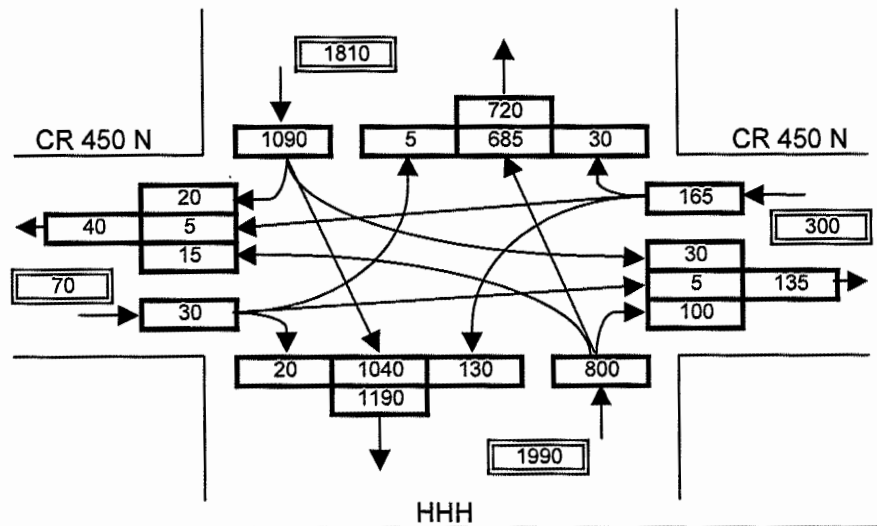

ADT

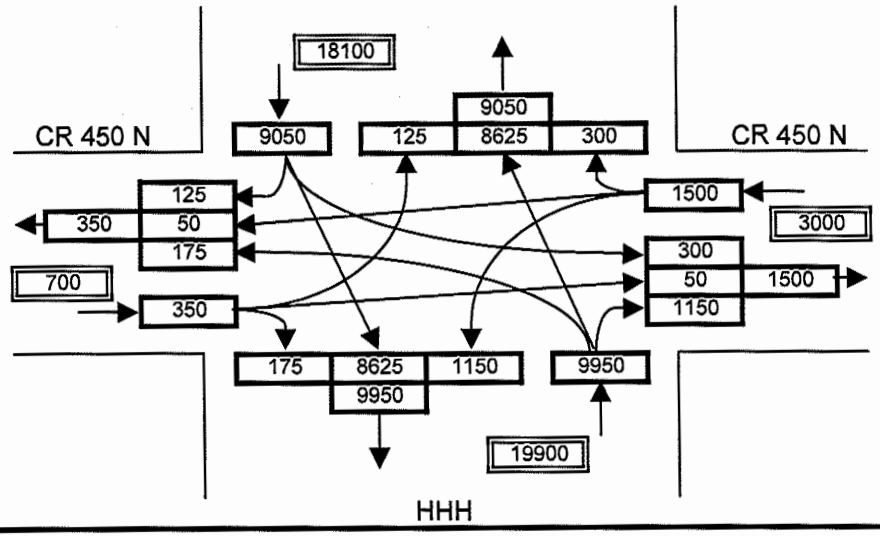

PM Design Hour

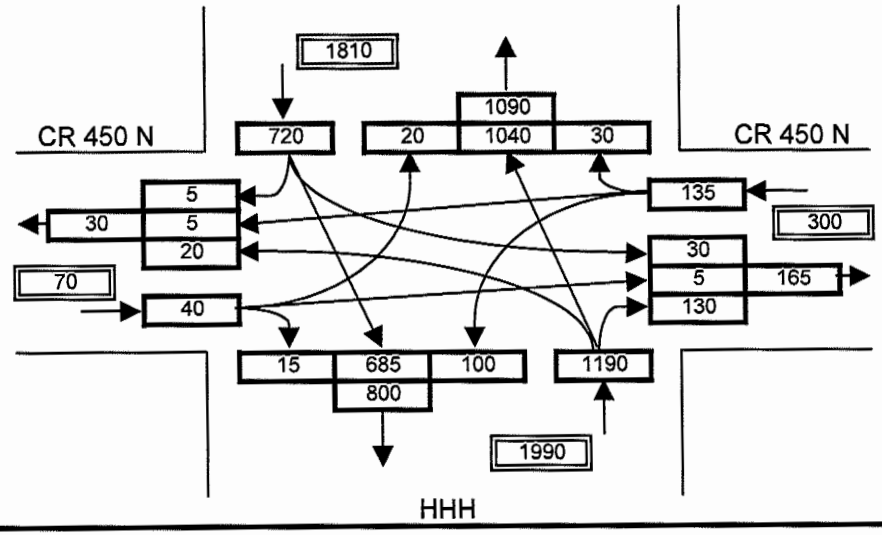

FIGURE 1

Intersection	Hoosier Heartland Highway @ CR 750 E
Jurisdiction	Indiana
Year/Time Period	2030 Design Hour

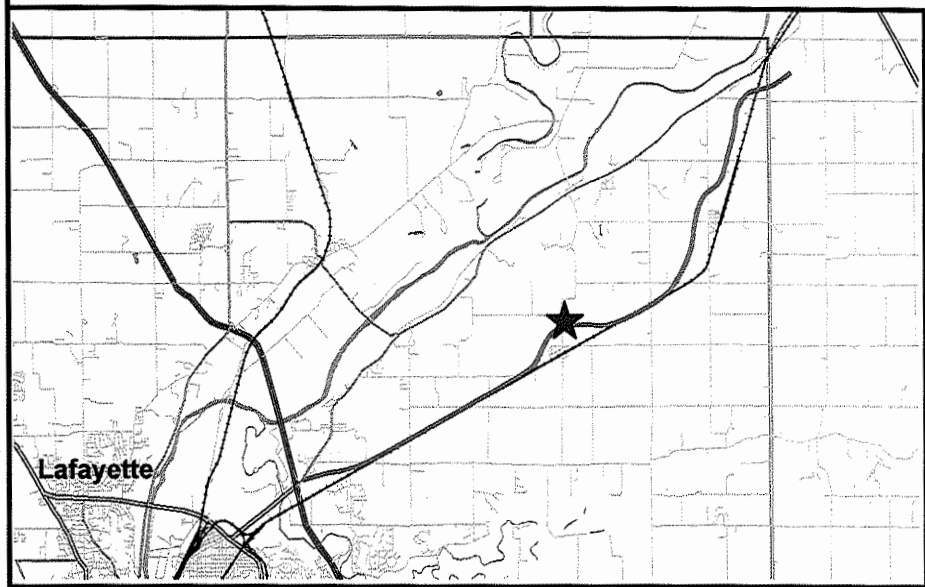

AM Design Hour

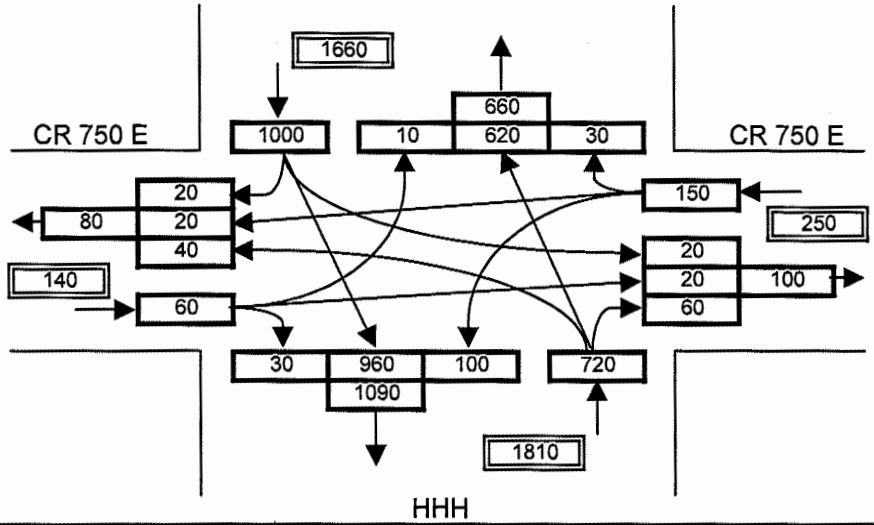

ADT

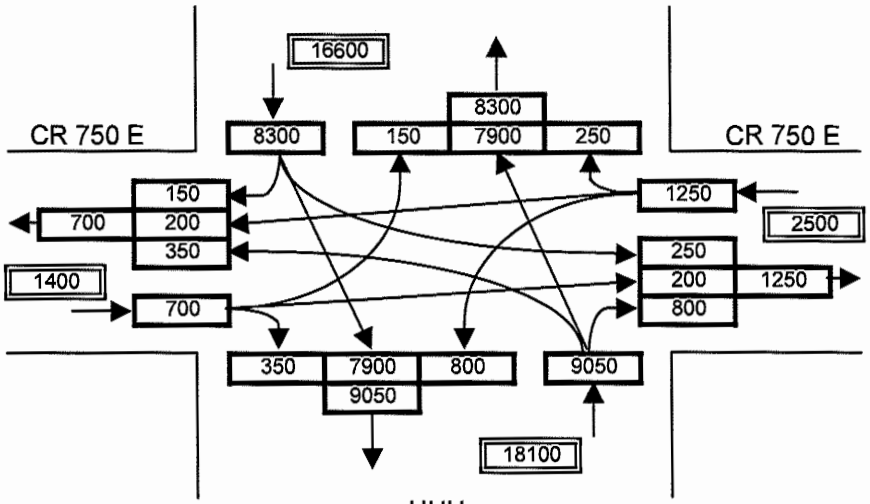

PM Design Hour

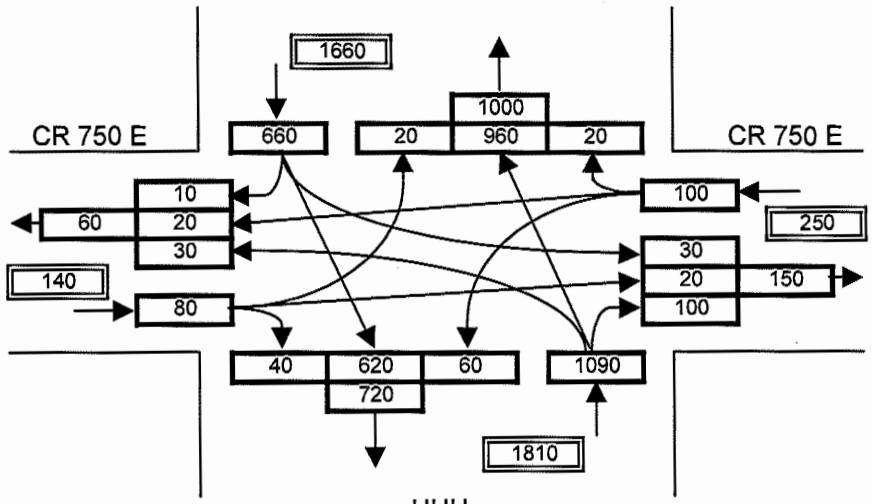

FIGURE 1

Intersection	Hoosier Heartland Highway @ CR 900 E
Jurisdiction	Indiana
Year/Time Period	2030 Design Hour

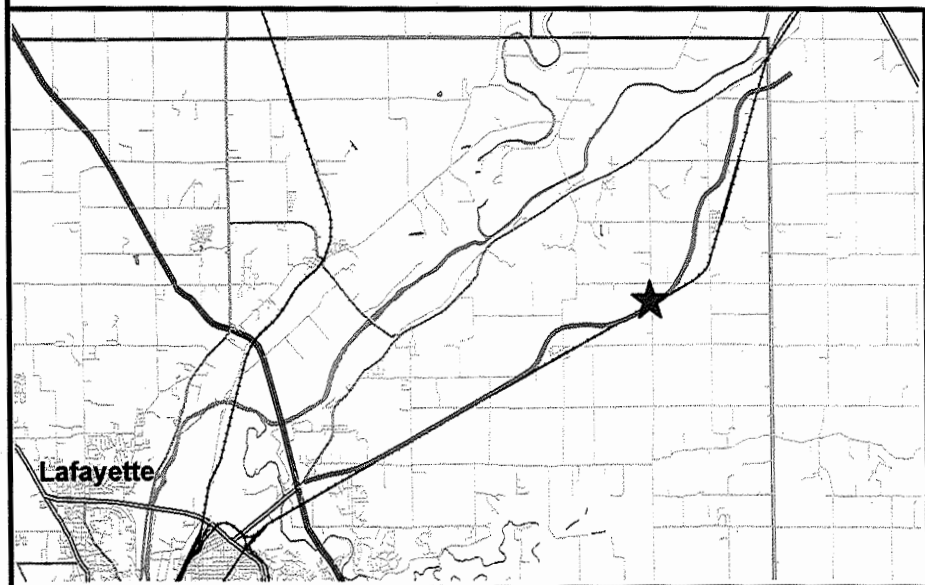

AM Design Hour

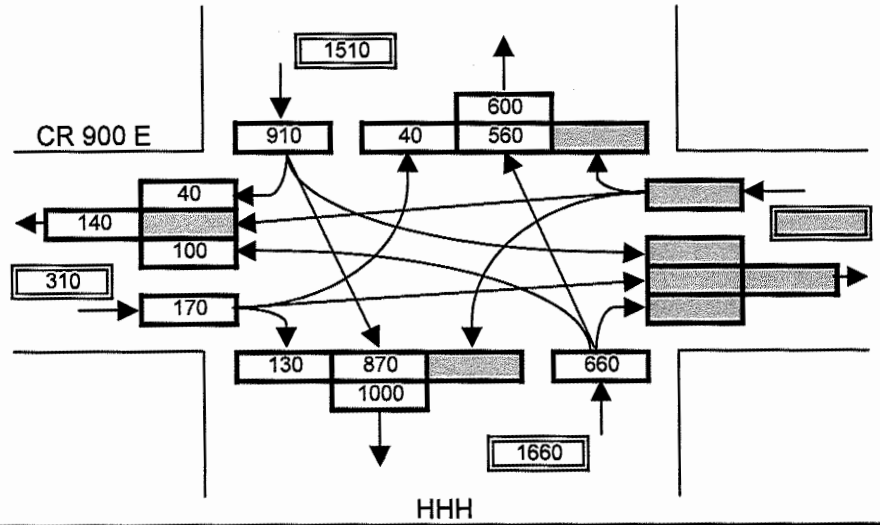

ADT

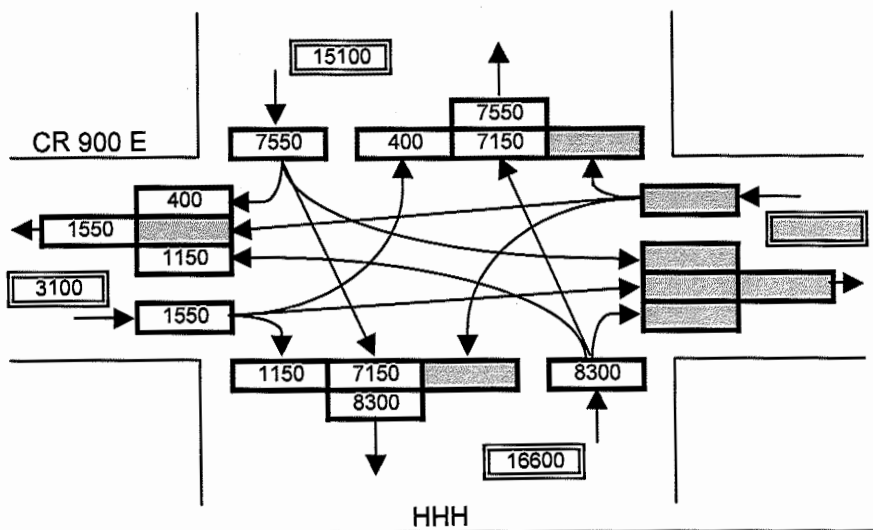

PM Design Hour

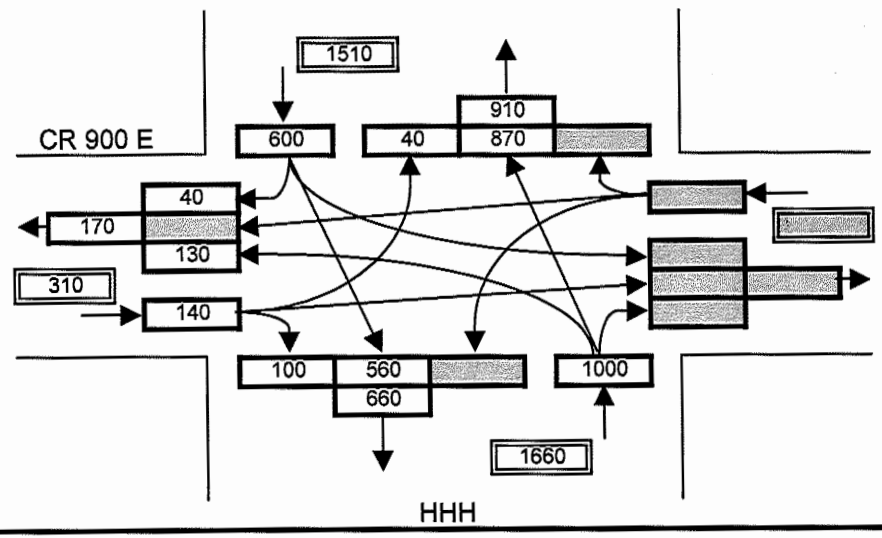

FIGURE 1

Intersection	CR 900 E Connector @ CR 900 E
Jurisdiction	Indiana
Year/Time Period	2030 Design Hour

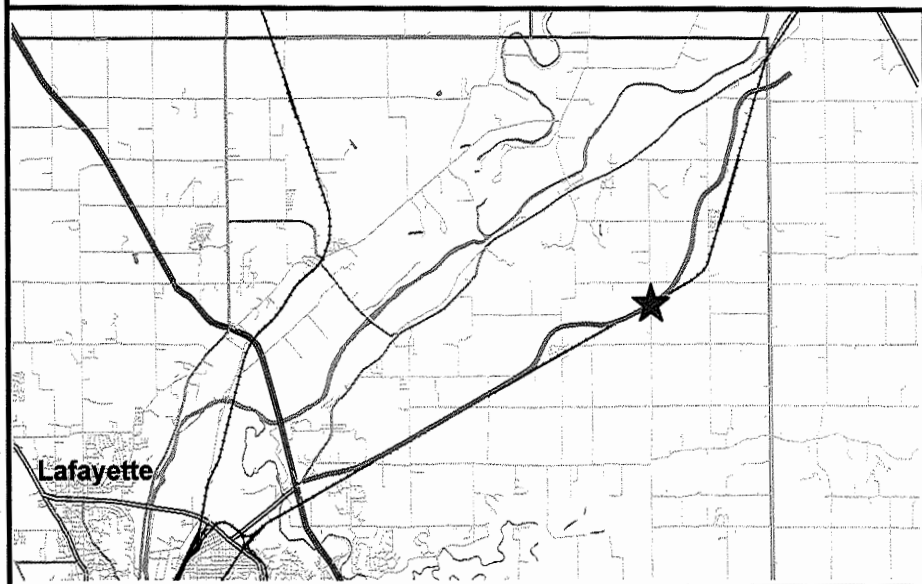

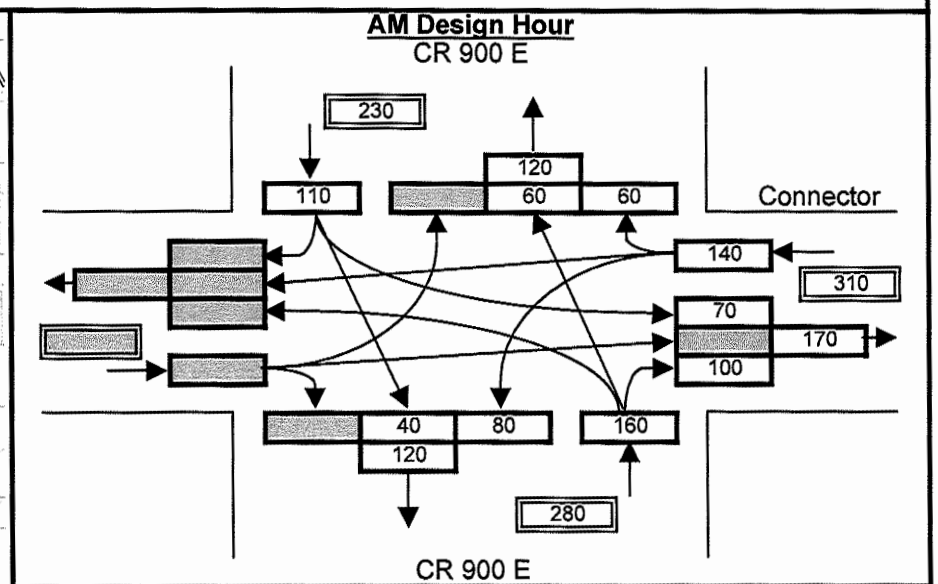

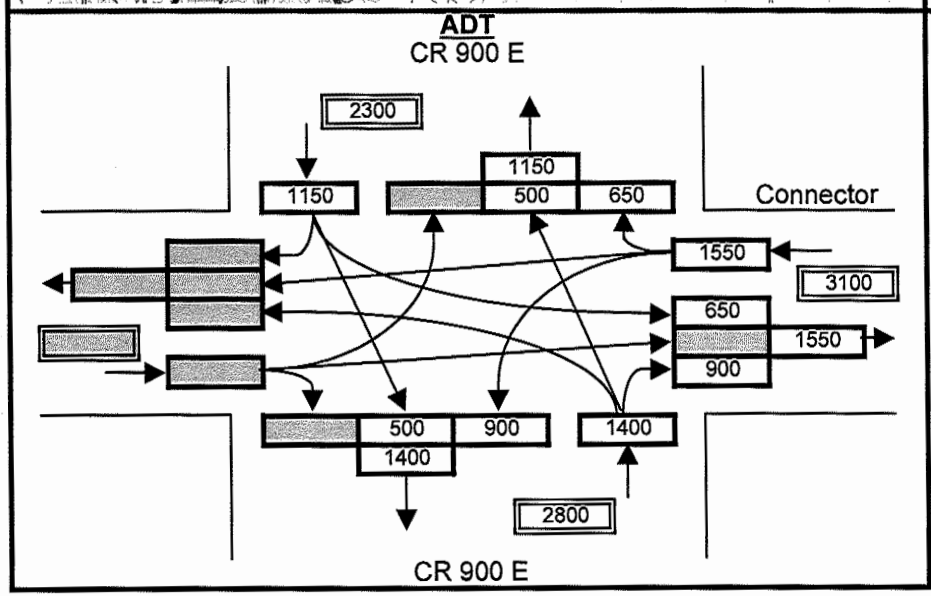

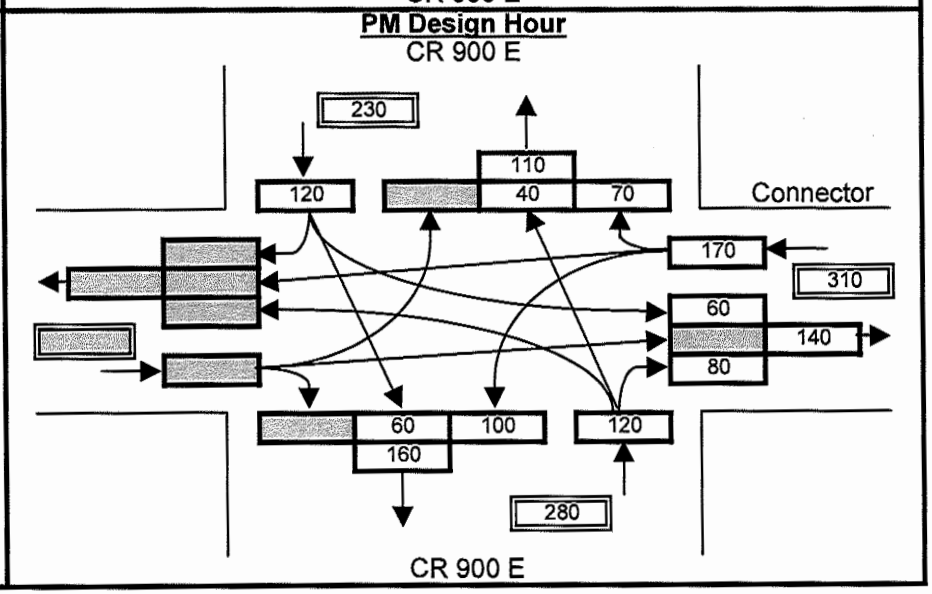

FIGURE 1

Intersection	Hoosier Heartland Highway @ CR 700 N
Jurisdiction	Indiana
Year/Time Period	2030 Design Hour

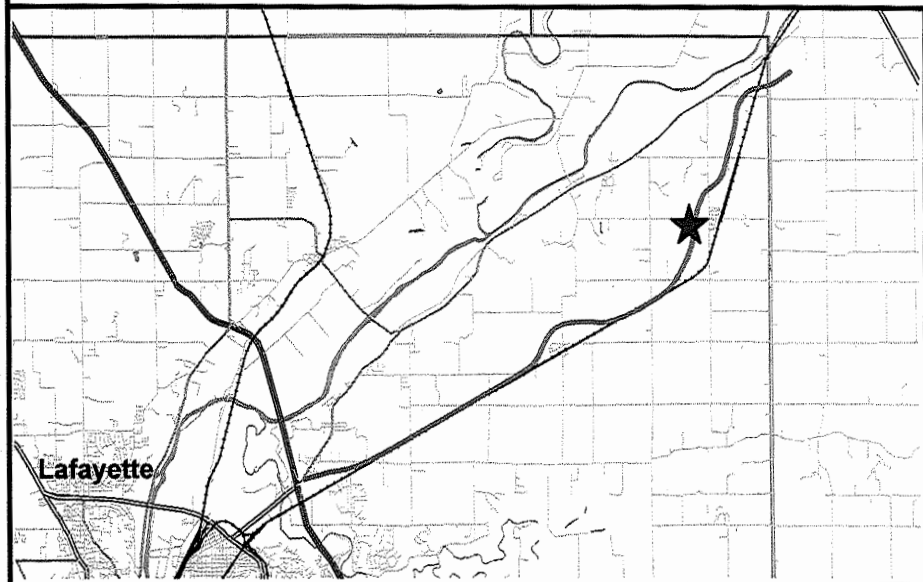

AM Design Hour

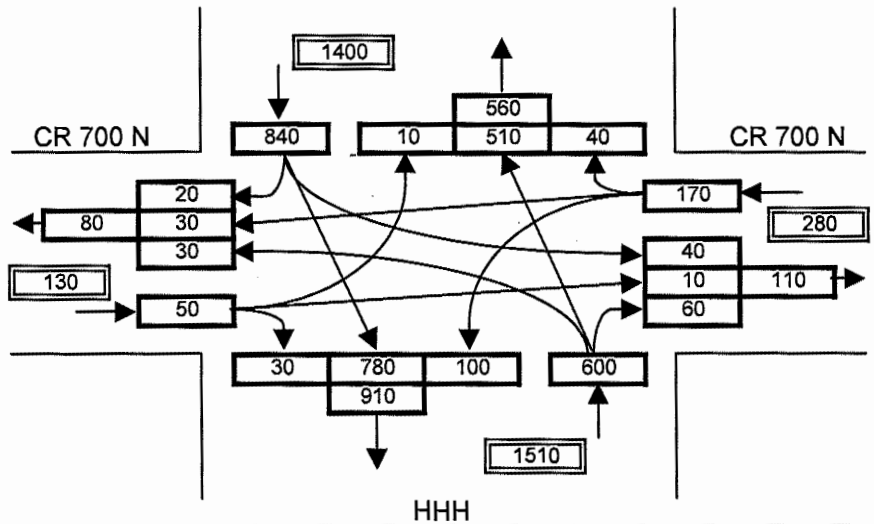

ADT

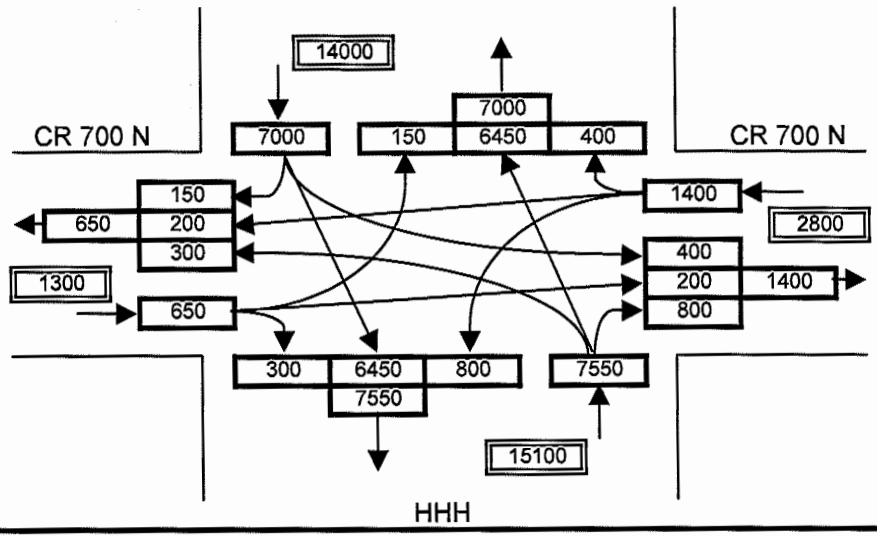

PM Design Hour

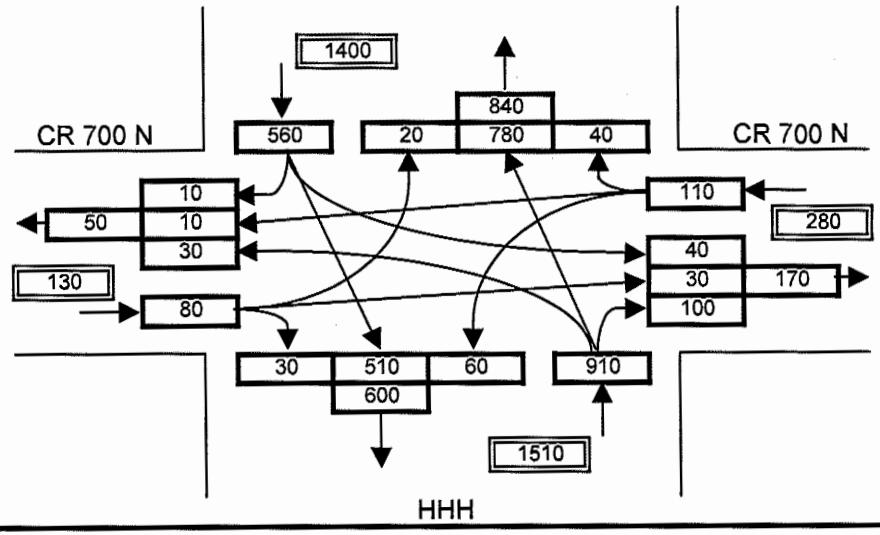

FIGURE 1

Intersection	Hoosier Heartland Highway @ Old SR 25
Jurisdiction	Indiana
Year/Time Period	2030 Design Hour

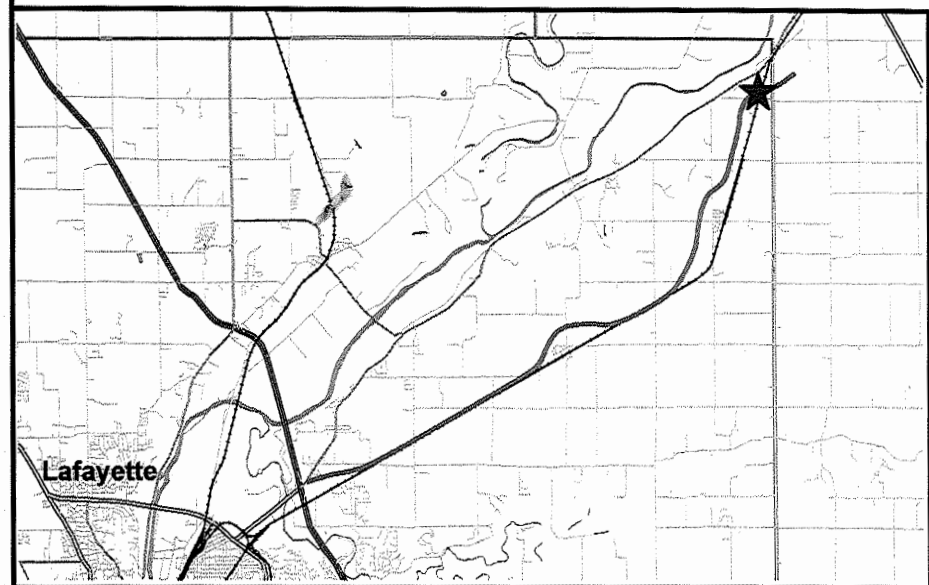

AM Design Hour

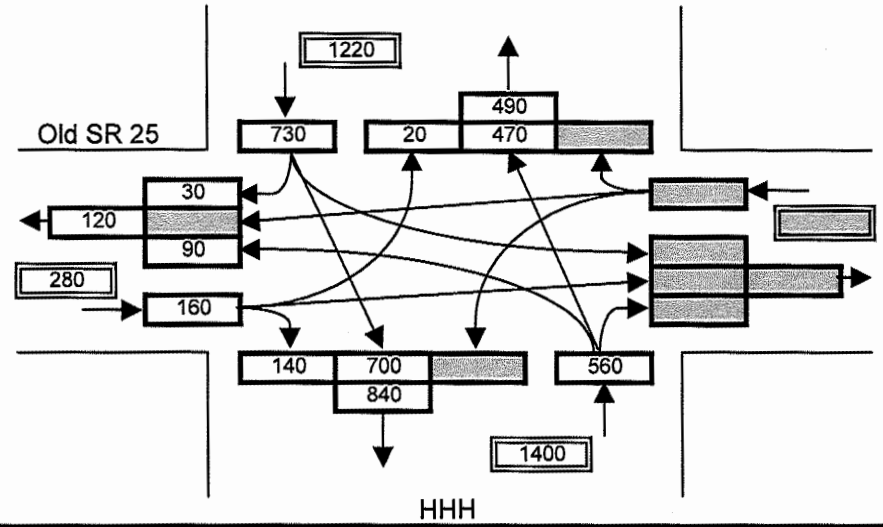

ADT

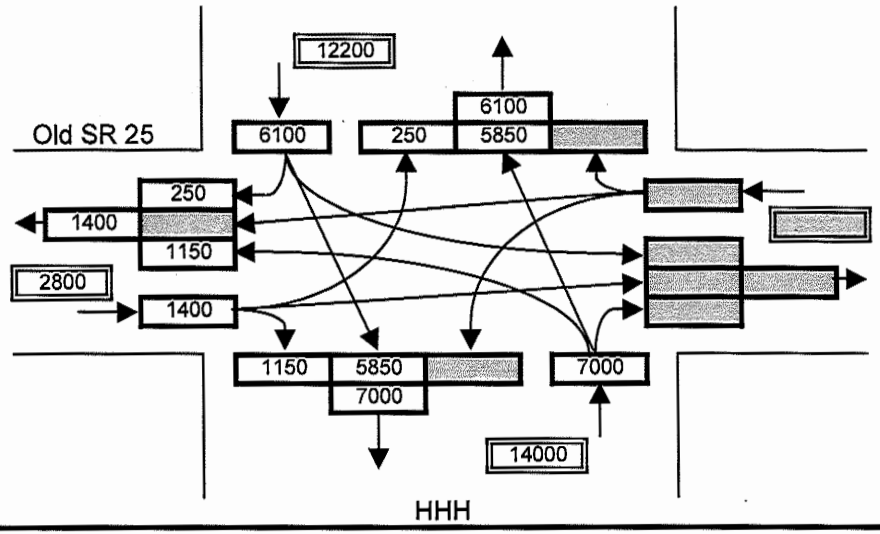

PM Design Hour

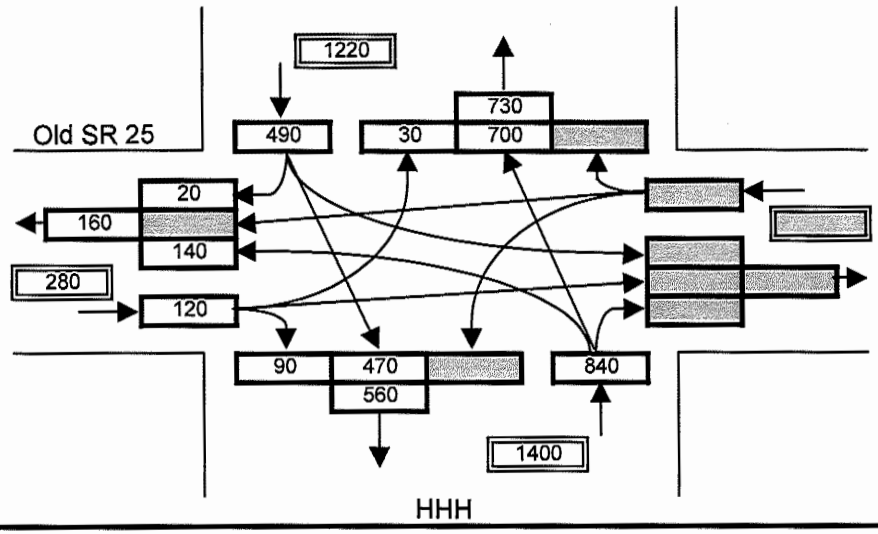

HHH at SR 25 CONNECTOR
AADT TURNING PATTERNS

APPROACHES ARE NUMBERED COUNTERCLOCKWISE. APPROACH 1 IS:
SR 25 CONNECTOR

SEED (INPUT DIRECTLY):

ENTERING VIA	LEFT	STRAIGHT	RIGHT
1	18.00	-1.00	82.00
2	22.000	78.000	-1.000
3	-1.00	-1.00	-1.00
4	-1.000	95.000	5.000

APPROACH:	1	2	3	4
ENTERING VOLUMES:	1077.00	5385.00	-99.00	4692.00
LEAVING VOLUMES:	1077.00	5385.00	-99.00	4692.00

BIPROPORTIONAL ESTIMATES:

ENTERING VIA	LEFT	STRAIGHT	RIGHT	TOTAL	LEFT	STRAIGHT	RIGHT
1	203.536	.000	873.464	1077.000	.189	.000	.811
2	897.887	4487.114	.000	5385.000	.167	.833	.000
3	.000	.000	.000	.000	.355	.268	.377
4	.000	4513.110	178.890	4692.000	.000	.962	.038

LEAVING VIA	LEFT	STRAIGHT	RIGHT	TOTAL	LEFT	STRAIGHT	RIGHT
1	897.887	.000	178.890	1076.777	.834	.000	.166
2	.000	4513.110	873.464	5386.574	.000	.838	.162
3	.000	.000	.000	.000	.423	.095	.482
4	203.536	4487.114	.000	4690.650	.000	.962	.038

HHH AT SR 25 CONNECTOR
AM DHV TURNING PATTERSN

APPROACHES ARE NUMBERED COUNTERCLOCKWISE. APPROACH 1 IS:
SR 25 CONNECTOR

SEED (INPUT DIRECTLY):

ENTERING VIA	LEFT	STRAIGHT	RIGHT
1	18.00	-1.00	82.00
2	12.000	88.000	-1.000
3	-1.00	-1.00	-1.00
4	-1.000	97.000	3.000

APPROACH:	1	2	3	4
ENTERING VOLUMES:	123.00	431.00	.00	561.00
LEAVING VOLUMES:	92.00	646.00	.00	377.00

BIPROPORTIONAL ESTIMATES:

ENTERING VIA	LEFT	STRAIGHT	RIGHT	TOTAL	LEFT	STRAIGHT	RIGHT
1	18.369	.000	104.631	123.000	.149	.000	.851
2	72.249	358.751	.000	431.000	.168	.832	.000
3	.000	.000	.000	.000	.335	.396	.268
4	.000	541.229	19.771	561.000	.000	.965	.035

LEAVING VIA	LEFT	STRAIGHT	RIGHT	TOTAL	LEFT	STRAIGHT	RIGHT
1	72.249	.000	19.771	92.020	.785	.000	.215
2	.000	541.229	104.631	645.861	.000	.838	.162
3	.000	.000	.000	.000	.467	.107	.426
4	18.369	358.751	.000	377.119	.000	1.435	.052

HHH AT SR 25 CONNECTOR
PM DHV TURNING PATTERNS

APPROACHES ARE NUMBERED COUNTERCLOCKWISE. APPROACH 1 IS:
SR 25 CONNECTOR

SEED (INPUT DIRECTLY):

ENTERING VIA	LEFT	STRAIGHT	RIGHT
1	28.00	-1.00	72.00
2	28.000	72.000	-1.000
3	-1.00	-1.00	-1.00
4	-1.000	87.000	13.000

APPROACH:	1	2	3	4
ENTERING VOLUMES:	92.00	646.00	.00	377.00
LEAVING VOLUMES:	123.00	431.00	.00	561.00

BIPROPORTIONAL ESTIMATES:

ENTERING VIA	LEFT	STRAIGHT	RIGHT	TOTAL	LEFT	STRAIGHT	RIGHT
1	19.612	.000	72.388	92.000	.213	.000	.787
2	104.498	541.502	.000	646.000	.162	.838	.000
3	.000	.000	.000	.000	.490	.169	.341
4	.000	358.482	18.518	377.000	.000	.951	.049

LEAVING VIA	LEFT	STRAIGHT	RIGHT	TOTAL	LEFT	STRAIGHT	RIGHT
1	104.498	.000	18.518	123.017	.849	.000	.151
2	.000	358.482	72.388	430.870	.000	.832	.168
3	.000	.000	.000	.000	.259	.063	.678
4	19.612	541.502	.000	561.113	.000	.639	.033

CTE ENGINEERS
CONSOER TOWNSEND ENVIRODYNE ENGINEERS, INC.

PROJECT INDOT FORECASTING			JOB NO.
SUBJECT HHH AT OLD SR 25 (EAST) AADT DERIVATION			SHEET
DESIGNED TMA	DATE 11/2/06	CHECKED	DATE

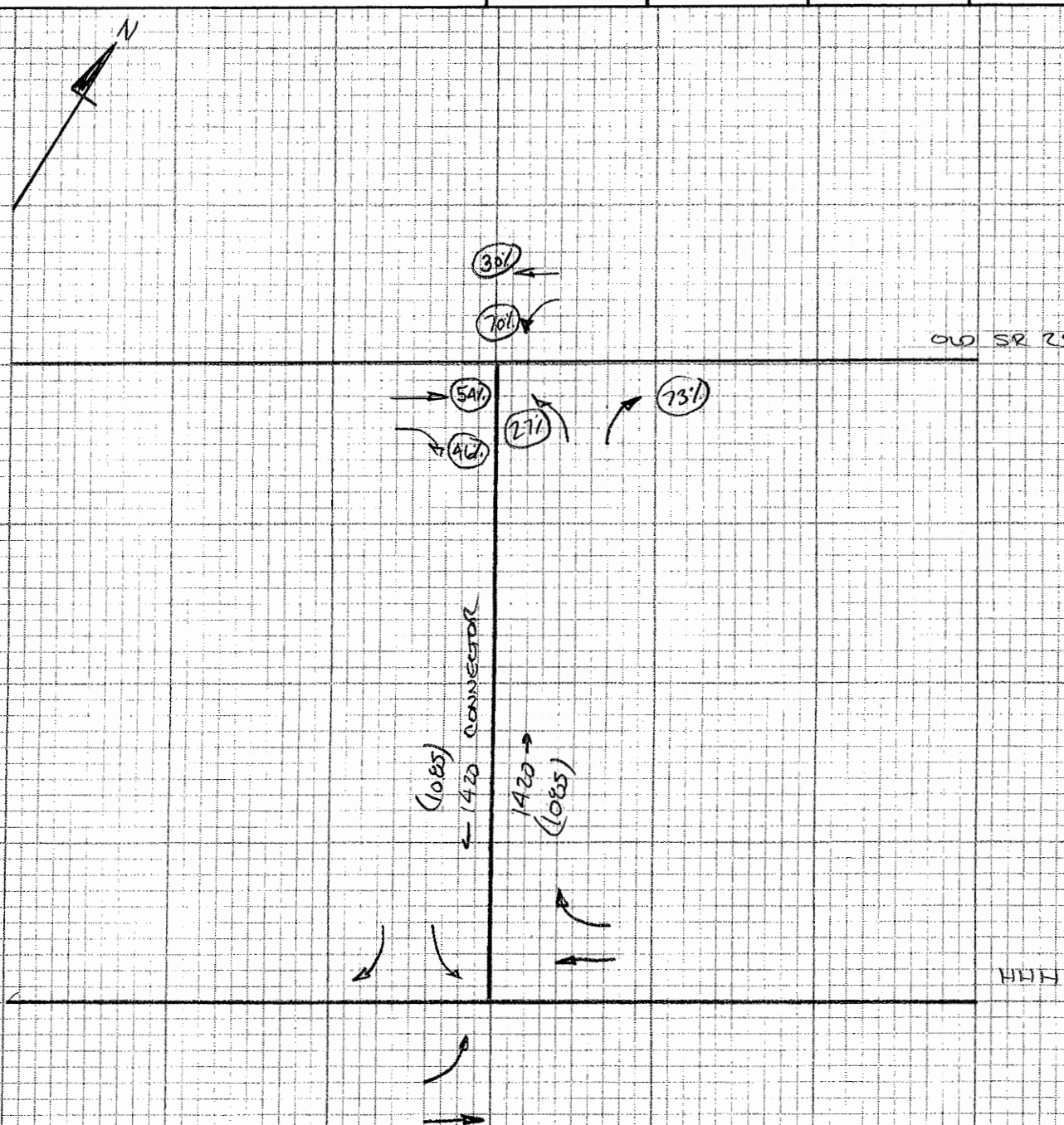

LEGEND

XXX 2030 BASE VOLUMES

(XXX) 2006 ADJUSTED VOLUMES

(XX%) TURNING %'S (TCAPC)

CTE ENGINEERS CONSOER TOWNSEND ENVIRODYNE ENGINEERS, INC.	PROJECT INDOT FORECASTING			JOB NO.
	SUBJECT HHH AT OLD SR 25 (EAST) AM-DHV DERIVATION			SHEET
	DESIGNED TMA	DATE 11/2/06	CHECKED	DATE

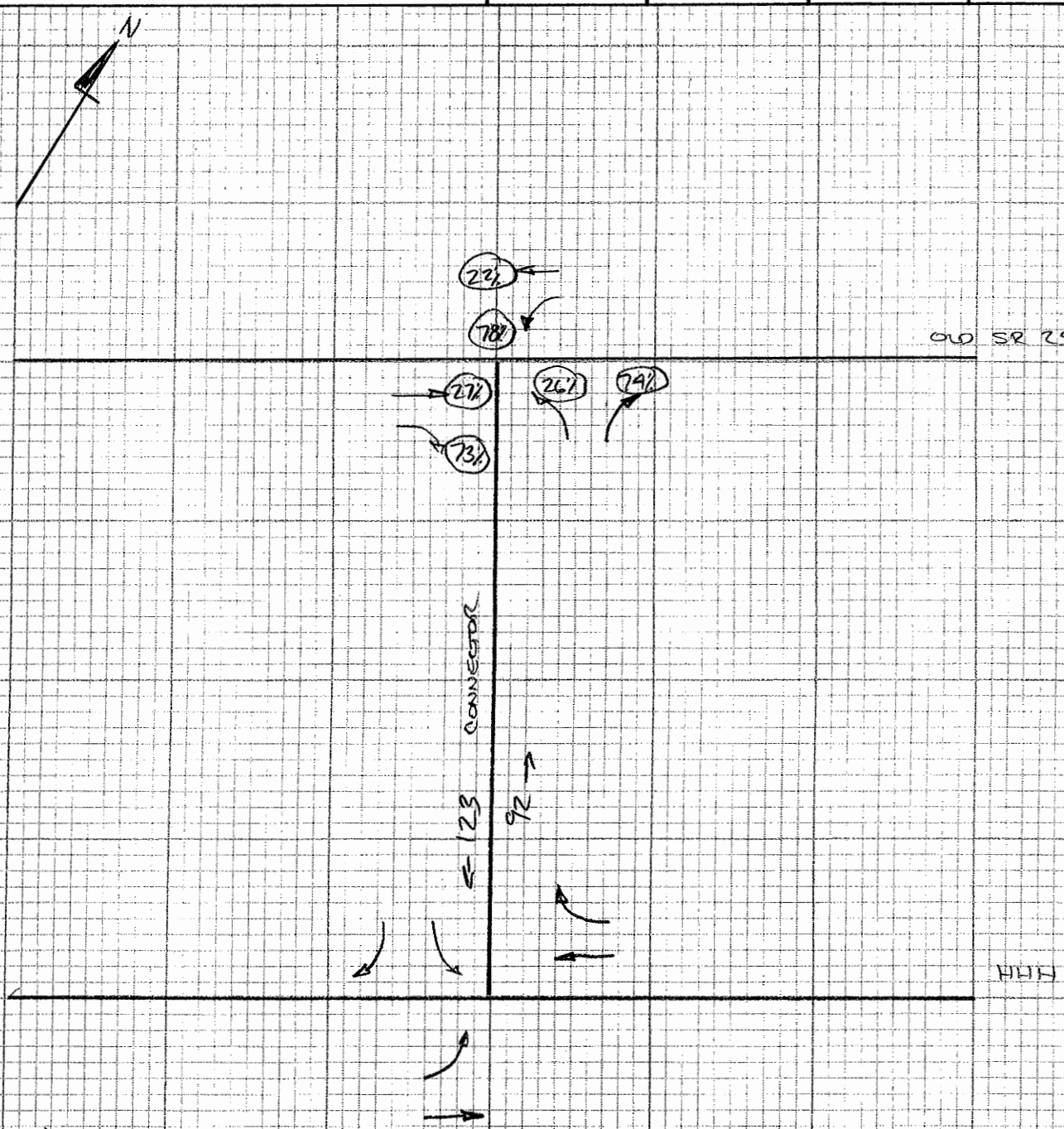

LEGEND

XXX 2030 BASE VOLUMES

(XXX) 2006 ADJUSTED VOLUMES

XX% TURNING %'S (TCAPE)

CTE ENGINEERS
CONSOER TOWNSEND ENVIRODYNE ENGINEERS, INC.

PROJECT INDOT FORECASTING			JOB NO.
SUBJECT HHH AT OLD SR 25 (EAST) PM-DHV DERIVATION			SHEET
TMA DESIGNED	DATE 11/2/06	CHECKED	DATE

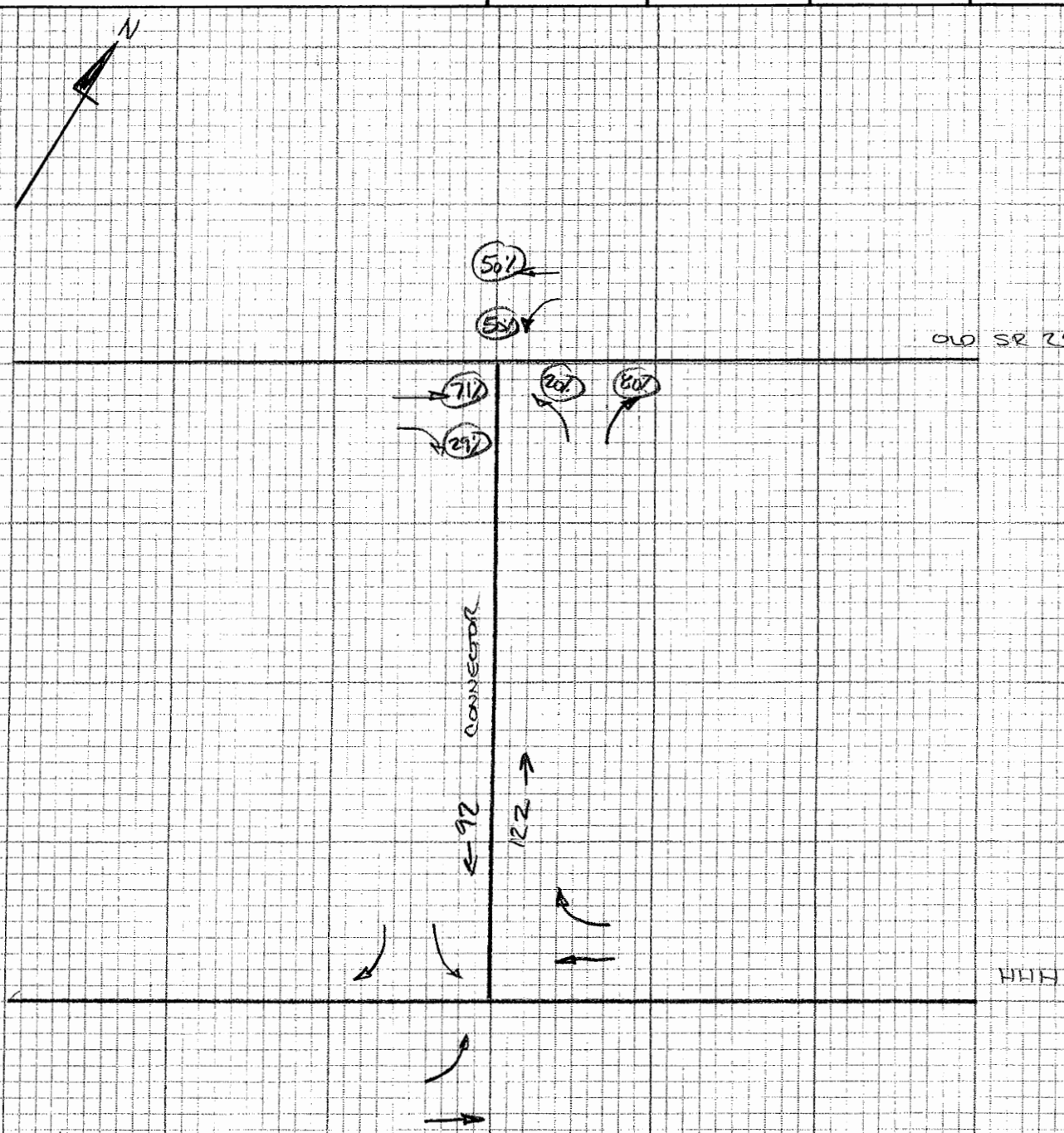

LEGEND

XXX : 2030 BASE VOLUMES

(XXX): 2006 ADJUSTED VOLUMES

XXX% : TURNING %'s (TCAPC)

Final Volume and Percentage Computations

INDOT Traffic Forecasts

Date: Oct-06
Route: SR 25
City/County: Tippecanoe
Des. No.: 9802920
Intersection: SR 25 (HHH) at I-65 SB Ramps

TMOVES Turning Volumes:

AADT	Left	Thru	Right		AM DHV	Left	Thru	Right		PM DHV	Left	Thru	Right
1	546	10	1191		1	80	1	110		1	30	1	129
2		8763	3473		2		713	307		2		1041	387
3					3					3			
4	3026	11035			4	337	1318			4	288	831	

Commercial Vehicle Percentages:

1	Left	Thru	Right	2	Left	Thru	Right	3	Left	Thru	Right	4	Left	Thru	Right
AADT	16%	10%	8%			19%	5%						9%	14%	
AM DHV	20%	11%	11%			18%	9%						8%	15%	
PM DHV	14%	10%	4%			15%	5%						11%	12%	

ANALYSIS

AADT

		NE	NW	NT		SE	SW	ST		ES	EN	ET		WN	WS	WT
CV %		0%	0%	0%		16%	8%	10%		5%	0%	19%		0%	9%	14%
TMOVES Volumes		0	0	0		546	1,191	10		3,473	0	8,763		0	3,026	11,035
PC Turning Volumes		0	0	0		459	1,096	9		3,299	0	7,098		0	2,754	9,490
CV Turning Volumes		0	0	0		87	95	1		174	0	1,665		0	272	1,545
Total AADT Volume		**0**	**0**	**0**		**550**	**1190**	**10**		**3470**	**0**	**8760**		**0**	**3030**	**11040**
AADT %CV						**16%**	**8%**	**10%**		**5%**		**19%**			**9%**	**14%**

AM Peak Hour

		NE	NW	NT		SE	SW	ST		ES	EN	ET		WN	WS	WT
%CV		0%	0%	0%		20%	11%	11%		9%	0%	18%		0%	8%	15%
Entering Volume		0	0	0		80	110	1		307	0	713		0	337	1,318
PC Turning Volumes		0	0	0		64	98	1		279	0	585		0	310	1,120
CV Turning Volumes		0	0	0		16	12	0		28	0	128		0	27	198
AM-DHV Volume		**0**	**0**	**0**		**80**	**110**	**1**		**307**	**0**	**713**		**0**	**337**	**1318**
AM DHV %						**15%**	**9%**	**10%**		**9%**		**8%**			**11%**	**12%**
AM DHV %CV						**20%**	**11%**	**11%**		**9%**		**18%**			**8%**	**15%**

PM Peak Hour

		NE	NW	NT		SE	SW	ST		ES	EN	ET		WN	WS	WT
%CV		0%	0%	0%		14%	4%	10%		5%	0%	15%		0%	11%	12%
Entering Volume		0	0	0		30	129	1		387	0	1,041		0	288	831
PC Turning Volumes		0	0	0		26	124	1		368	0	885		0	256	731
CV Turning Volumes		0	0	0		4	5	0		19	0	156		0	32	100
PM-DHV Volume		**0**	**0**	**0**		**30**	**129**	**1**		**387**	**0**	**1041**		**0**	**288**	**831**
PM DHV %						**5%**	**11%**	**10%**		**11%**		**12%**			**10%**	**8%**
PM DHV %CV						**14%**	**4%**	**10%**		**5%**		**15%**			**11%**	**12%**

INDOT Traffic Forecasts

Date: Oct-06
Route: SR 25
City/County: Tippecanoe
Des. No.: 9802920
Intersection: SR 25 (HHH) at I-65 NB Ramps

TMOVES Turning Volumes:

AADT	Left	Thru	Right		AM DHV	Left	Thru	Right		PM DHV	Left	Thru	Right
1					1					1			
2	1191	8118			2	129	664			2	110	961	
3	3473	10	3026		3	387	1	228		3	307	1	377
4		10598	546		4		1308	30		4		812	80

Commercial Vehicle Percentages:

1	Left	Thru	Right	2	Left	Thru	Right	3	Left	Thru	Right	4	Left	Thru	Right
AADT					9%	18%			7%	10%	13%			14%	9%
AM DHV					15%	19%			8%	11%	22%			15%	8%
PM DHV					6%	15%			7%	10%	9%			12%	9%

ANALYSIS

AADT

		NE	NW	NT		SE	SW	ST		ES	EN	ET		WN	WS	WT
CV %		13%	7%	10%		0%	0%	0%		0%	9%	18%		9%	0%	14%
TMOVES Volumes		3,026	3,473	10		0	0	0		0	1,191	8,118		546	0	10,598
PC Turning Volumes		2,633	3,230	9		0	0	0		0	1,084	6,657		497	0	9,114
CV Turning Volumes		393	243	1		0	0	0		0	107	1,461		49	0	1,484
Total AADT Volume		**3030**	**3470**	**10**		**0**	**0**	**0**		**0**	**1190**	**8120**		**550**	**0**	**10600**
AADT %CV		**13%**	**7%**	**10%**							**9%**	**18%**		**9%**		**14%**

AM Peak Hour

		NE	NW	NT		SE	SW	ST		ES	EN	ET		WN	WS	WT
%CV		22%	8%	11%		0%	0%	0%		0%	15%	19%		8%	0%	15%
Entering Volume		228	387	1		0	0	0		0	129	664		30	0	1,308
PC Turning Volumes		178	356	1		0	0	0		0	110	538		28	0	1,112
CV Turning Volumes		50	31	0		0	0	0		0	19	126		2	0	196
AM-DHV Volume		**228**	**387**	**1**		**0**	**0**	**0**		**0**	**129**	**664**		**30**	**0**	**1308**
AM DHV %		**8%**	**11%**	**10%**							**11%**	**8%**		**5%**		**12%**
AM DHV %CV		**22%**	**8%**	**11%**							**15%**	**19%**		**8%**		**15%**

PM Peak Hour

		NE	NW	NT		SE	SW	ST		ES	EN	ET		WN	WS	WT
%CV		9%	7%	10%		0%	0%	0%		0%	6%	15%		9%	0%	12%
Entering Volume		377	307	1		0	0	0		0	110	961		80	0	812
PC Turning Volumes		343	286	1		0	0	0		0	103	817		73	0	715
CV Turning Volumes		34	21	0		0	0	0		0	7	144		7	0	97
PM-DHV Volume		**377**	**307**	**1**		**0**	**0**	**0**		**0**	**110**	**961**		**80**	**0**	**812**
PM DHV %		**12%**	**9%**	**10%**							**9%**	**12%**		**15%**		**8%**
PM DHV %CV		**9%**	**7%**	**10%**							**6%**	**15%**		**9%**		**12%**

INDOT Traffic Forecasts

Date: Oct-06
Route: SR 25
City/County: Tippecanoe
Des. No.: 9802920
Intersection: HHH at SR 25 Connector (West)

TMOVES Turning Volumes:

AADT	Left	Thru	Right	AM DHV	Left	Thru	Right	PM DHV	Left	Thru	Right
1	580		3082	1	51		360	1	100		291
2	3085	8079		2	251	641		2	400	938	
3				3				3			
4		8080	584	4		978	60	4		601	91

Commercial Vehicle Percentages:

1	Left	Thru	Right	2	Left	Thru	Right	3	Left	Thru	Right	4	Left	Thru	Right
AADT	7%		6%		6%	18%								15%	7%
AM DHV	8%		7%		7%	15%								12%	8%
PM DHV	7%		6%		6%	16%								16%	7%

ANALYSIS

AADT

	NE	NW	NT	SE	SW	ST	ES	EN	ET	WN	WS	WT
CV %	0%	0%	0%	7%	6%	0%	0%	6%	18%	7%	0%	15%
TMOVES Volumes	0	0	0	580	3,082	0	0	3,085	8,079	584	0	8,080
PC Turning Volumes	0	0	0	539	2,897	0	0	2,900	6,625	543	0	6,868
CV Turning Volumes	0	0	0	41	185	0	0	185	1,454	41	0	1,212
Total AADT Volume	**0**	**0**	**0**	**580**	**3080**	**0**	**0**	**3080**	**8080**	**580**	**0**	**8080**
AADT %CV				**7%**	**6%**			**6%**	**18%**	**7%**		**15%**

AM Peak Hour

	NE	NW	NT	SE	SW	ST	ES	EN	ET	WN	WS	WT
%CV	0%	0%	0%	8%	7%	0%	0%	7%	15%	8%	0%	12%
Entering Volume	0	0	0	51	360	0	0	251	641	60	0	978
PC Turning Volumes	0	0	0	47	335	0	0	233	545	55	0	861
CV Turning Volumes	0	0	0	4	25	0	0	18	96	5	0	117
AM-DHV Volume	**0**	**0**	**0**	**51**	**360**	**0**	**0**	**251**	**641**	**60**	**0**	**978**
AM DHV %				**9%**	**12%**			**8%**	**8%**	**10%**		**12%**
AM DHV %CV				**8%**	**7%**			**7%**	**15%**	**8%**		**12%**

PM Peak Hour

	NE	NW	NT	SE	SW	ST	ES	EN	ET	WN	WS	WT
%CV	0%	0%	0%	7%	6%	0%	0%	6%	16%	7%	0%	16%
Entering Volume	0	0	0	100	291	0	0	400	938	91	0	601
PC Turning Volumes	0	0	0	93	274	0	0	376	788	85	0	505
CV Turning Volumes	0	0	0	7	17	0	0	24	150	6	0	96
PM-DHV Volume	**0**	**0**	**0**	**100**	**291**	**0**	**0**	**400**	**938**	**91**	**0**	**601**
PM DHV %				**17%**	**9%**			**13%**	**12%**	**16%**		**7%**
PM DHV %CV				**7%**	**6%**			**6%**	**16%**	**7%**		**16%**

INDOT Traffic Forecasts

Date: Oct-06
Route: SR 25
City/County: Tippecanoe
Des. No.: 9802920
Intersection: CR 300N at LSR (CR 400E)

TMOVES Turning Volumes:

AADT	Left	Thru	Right		AM DHV	Left	Thru	Right		PM DHV	Left	Thru	Right
1	885		1500		1	69		123		1	108		177
2	1500	385			2	177	31			2	123	46	
3					3					3			
4		385	885		4		46	108		4		31	69

Commercial Vehicle Percentages:

1	Left	Thru	Right	2	Left	Thru	Right	3	Left	Thru	Right	4	Left	Thru	Right
AADT	5%		5%		5%	6%								6%	5%
AM DHV	6%		6%		6%	7%								7%	6%
PM DHV	5%		5%		5%	6%								6%	5%

ANALYSIS

AADT

		NE	NW	NT		SE	SW	ST		ES	EN	ET		WN	WS	WT
CV %		0%	0%	0%		5%	5%	0%		0%	5%	6%		5%	0%	6%
TMOVES Volumes		0	0	0		885	1,500	0		0	1,500	385		885	0	385
PC Turning Volumes		0	0	0		841	1,425	0		0	1,425	362		841	0	362
CV Turning Volumes		0	0	0		44	75	0		0	75	23		44	0	23
Total AADT Volume		**0**	**0**	**0**		**890**	**1500**	**0**		**0**	**1500**	**390**		**890**	**0**	**390**
AADT %CV						**5%**	**5%**				**5%**	**6%**		**5%**		**6%**

AM Peak Hour

		NE	NW	NT		SE	SW	ST		ES	EN	ET		WN	WS	WT
%CV		0%	0%	0%		6%	6%	0%		0%	6%	7%		6%	0%	7%
Entering Volume		0	0	0		69	123	0		0	177	31		108	0	46
PC Turning Volumes		0	0	0		65	116	0		0	166	29		102	0	43
CV Turning Volumes		0	0	0		4	7	0		0	11	2		6	0	3
AM-DHV Volume		**0**	**0**	**0**		**69**	**123**	**0**		**0**	**177**	**31**		**108**	**0**	**46**
AM DHV %						**8%**	**8%**				**12%**	**8%**		**12%**		**12%**
AM DHV %CV						**6%**	**6%**				**6%**	**7%**		**6%**		**7%**

PM Peak Hour

		NE	NW	NT		SE	SW	ST		ES	EN	ET		WN	WS	WT
%CV		0%	0%	0%		5%	5%	0%		0%	5%	6%		5%	0%	6%
Entering Volume		0	0	0		108	177	0		0	123	46		69	0	31
PC Turning Volumes		0	0	0		103	168	0		0	117	43		66	0	29
CV Turning Volumes		0	0	0		5	9	0		0	6	3		3	0	2
PM-DHV Volume		**0**	**0**	**0**		**108**	**177**	**0**		**0**	**123**	**46**		**69**	**0**	**31**
PM DHV %						**12%**	**12%**				**8%**	**12%**		**8%**		**8%**
PM DHV %CV						**5%**	**5%**				**5%**	**6%**		**5%**		**6%**

INDOT Traffic Forecasts

Date: Oct-06
Route: SR 25
City/County: Tippecanoe
Des. No.: 9802920
Intersection: HHH at CR 500E Connector

TMOVES Turning Volumes:

AADT	Left	Thru	Right		AM DHV	Left	Thru	Right		PM DHV	Left	Thru	Right
1	300		1300		1	31		154		1	31		108
2	1300	7346			2	108	585			2	154	885	
3					3					3			
4		7346	300		4		885	31		4		585	31

Commercial Vehicle Percentages:

1	Left	Thru	Right	2	Left	Thru	Right	3	Left	Thru	Right	4	Left	Thru	Right
AADT	8%		6%		6%	18%								15%	8%
AM DHV	9%		7%		7%	15%								12%	9%
PM DHV	8%		6%		6%	16%								14%	8%

ANALYSIS

AADT

	NE	NW	NT	SE	SW	ST	ES	EN	ET	WN	WS	WT
CV %	0%	0%	0%	8%	6%	0%	0%	6%	18%	8%	0%	15%
TMOVES Volumes	0	0	0	300	1,300	0	0	1,300	7,346	300	0	7,346
PC Turning Volumes	0	0	0	276	1,222	0	0	1,222	6,024	276	0	6,244
CV Turning Volumes	0	0	0	24	78	0	0	78	1,322	24	0	1,102
Total AADT Volume	**0**	**0**	**0**	**300**	**1300**	**0**	**0**	**1300**	**7350**	**300**	**0**	**7350**
AADT %CV				**8%**	**6%**			**6%**	**18%**	**8%**		**15%**

AM Peak Hour

	NE	NW	NT	SE	SW	ST	ES	EN	ET	WN	WS	WT
%CV	0%	0%	0%	9%	7%	0%	0%	7%	15%	9%	0%	12%
Entering Volume	0	0	0	31	154	0	0	108	585	31	0	885
PC Turning Volumes	0	0	0	28	143	0	0	100	497	28	0	779
CV Turning Volumes	0	0	0	3	11	0	0	8	88	3	0	106
AM-DHV Volume	**0**	**0**	**0**	**31**	**154**	**0**	**0**	**108**	**585**	**31**	**0**	**885**
AM DHV %				**10%**	**12%**			**8%**	**8%**	**10%**		**12%**
AM DHV %CV				**9%**	**7%**			**7%**	**15%**	**9%**		**12%**

PM Peak Hour

	NE	NW	NT	SE	SW	ST	ES	EN	ET	WN	WS	WT
%CV	0%	0%	0%	8%	6%	0%	0%	6%	16%	8%	0%	14%
Entering Volume	0	0	0	31	108	0	0	154	885	31	0	585
PC Turning Volumes	0	0	0	29	102	0	0	145	743	29	0	503
CV Turning Volumes	0	0	0	2	6	0	0	9	142	2	0	82
PM-DHV Volume	**0**	**0**	**0**	**31**	**108**	**0**	**0**	**154**	**885**	**31**	**0**	**585**
PM DHV %				**10%**	**8%**			**12%**	**12%**	**10%**		**8%**
PM DHV %CV				**8%**	**6%**			**6%**	**16%**	**8%**		**14%**

INDOT Traffic Forecasts

Date: Oct-06
Route: SR 25
City/County: Tippecanoe
Des. No.: 9802920
Intersection: CR 500E at CR 500E Connector

TMOVES Turning Volumes:

AADT	Left	Thru	Right		AM DHV	Left	Thru	Right		PM DHV	Left	Thru	Right
1		269	457		1		38	54		1		15	38
2	457		1144		2	38		100		2	54		131
3	1144	269			3	131	15			3	100	38	
4					4					4			

Commercial Vehicle Percentages:

1	Left	Thru	Right	2	Left	Thru	Right	3	Left	Thru	Right	4	Left	Thru	Right
AADT		8%	7%		7%		7%		7%	8%					
AM DHV		9%	8%		8%		8%		8%	9%					
PM DHV		8%	7%		7%		7%		7%	8%					

ANALYSIS

AADT

		NE	NW	NT		SE	SW	ST		ES	EN	ET		WN	WS	WT
CV %		0%	7%	8%		0%	7%	8%		7%	7%	0%		0%	0%	0%
TMOVES Volumes		0	1,144	269		0	457	269		1,144	457	0		0	0	0
PC Turning Volumes		0	1,064	247		0	425	247		1,064	425	0		0	0	0
CV Turning Volumes		0	80	22		0	32	22		80	32	0		0	0	0
Total AADT Volume		**0**	**1140**	**270**		**0**	**460**	**270**		**1140**	**460**	**0**		**0**	**0**	**0**
AADT %CV			**7%**	**8%**			**7%**	**8%**		**7%**	**7%**					

AM Peak Hour

		NE	NW	NT		SE	SW	ST		ES	EN	ET		WN	WS	WT
%CV		0%	8%	9%		0%	8%	9%		8%	8%	0%		0%	0%	0%
Entering Volume		0	131	15		0	54	38		100	38	0		0	0	0
PC Turning Volumes		0	121	14		0	50	35		92	35	0		0	0	0
CV Turning Volumes		0	10	1		0	4	3		8	3	0		0	0	0
AM-DHV Volume		**0**	**131**	**15**		**0**	**54**	**38**		**100**	**38**	**0**		**0**	**0**	**0**
AM DHV %			**11%**	**6%**			**12%**	**14%**		**9%**	**8%**					
AM DHV %CV			**8%**	**9%**			**8%**	**9%**		**8%**	**8%**					

PM Peak Hour

		NE	NW	NT		SE	SW	ST		ES	EN	ET		WN	WS	WT
%CV		0%	7%	8%		0%	7%	8%		7%	7%	0%		0%	0%	0%
Entering Volume		0	100	38		0	38	15		131	54	0		0	0	0
PC Turning Volumes		0	93	35		0	35	14		122	50	0		0	0	0
CV Turning Volumes		0	7	3		0	3	1		9	4	0		0	0	0
PM-DHV Volume		**0**	**100**	**38**		**0**	**38**	**15**		**131**	**54**	**0**		**0**	**0**	**0**
PM DHV %			**9%**	**14%**			**8%**	**6%**		**11%**	**12%**					
PM DHV %CV			**7%**	**8%**			**7%**	**8%**		**7%**	**7%**					

INDOT Traffic Forecasts

Date: Oct-06
Route: SR 25
City/County: Tippecanoe
Des. No.: 9802920
Intersection: CR 625E over HHH

TMOVES Turning Volumes:

AADT	Left	Thru	Right		AM DHV	Left	Thru	Right		PM DHV	Left	Thru	Right
1		100			1		10			1		10	
2		7654			2		616			2		916	
3		100			3		10			3		10	
4		7654			4		916			4		616	

Commercial Vehicle Percentages:

1	Left	Thru	Right	2	Left	Thru	Right	3	Left	Thru	Right	4	Left	Thru	Right
AADT		9%				18%				9%				15%	
AM DHV		10%				15%				10%				12%	
PM DHV		9%				14%				9%				14%	

ANALYSIS

AADT

		NE	NW	NT		SE	SW	ST		ES	EN	ET		WN	WS	WT
CV %		0%	0%	9%		0%	0%	9%		0%	0%	18%		0%	0%	15%
TMOVES Volumes		0	0	100		0	0	100		0	0	7,654		0	0	7,654
PC Turning Volumes		0	0	91		0	0	91		0	0	6,276		0	0	6,506
CV Turning Volumes		0	0	9		0	0	9		0	0	1,378		0	0	1,148
Total AADT Volume		**0**	**0**	**100**		**0**	**0**	**100**		**0**	**0**	**7650**		**0**	**0**	**7650**
AADT %CV				**9%**				**9%**				**18%**				**15%**

AM Peak Hour

		NE	NW	NT		SE	SW	ST		ES	EN	ET		WN	WS	WT
%CV		0%	0%	10%		0%	0%	10%		0%	0%	15%		0%	0%	12%
Entering Volume		0	0	10		0	0	10		0	0	616		0	0	916
PC Turning Volumes		0	0	9		0	0	9		0	0	524		0	0	806
CV Turning Volumes		0	0	1		0	0	1		0	0	92		0	0	110
AM-DHV Volume		**0**	**0**	**10**		**0**	**0**	**10**		**0**	**0**	**616**		**0**	**0**	**916**
AM DHV %				**10%**				**10%**				**8%**				**12%**
AM DHV %CV				**10%**				**10%**				**15%**				**12%**

PM Peak Hour

		NE	NW	NT		SE	SW	ST		ES	EN	ET		WN	WS	WT
%CV		0%	0%	9%		0%	0%	9%		0%	0%	14%		0%	0%	14%
Entering Volume		0	0	10		0	0	10		0	0	916		0	0	616
PC Turning Volumes		0	0	9		0	0	9		0	0	788		0	0	530
CV Turning Volumes		0	0	1		0	0	1		0	0	128		0	0	86
PM-DHV Volume		**0**	**0**	**10**		**0**	**0**	**10**		**0**	**0**	**916**		**0**	**0**	**616**
PM DHV %				**10%**				**10%**				**12%**				**8%**
PM DHV %CV				**9%**				**9%**				**14%**				**14%**

INDOT Traffic Forecasts

Date: Oct-06
Route: SR 25
City/County: Tippecanoe
Des. No.: 9802920
Intersection: HHH at CR 450N

TMOVES Turning Volumes:

AADT	Left	Thru	Right	AM DHV	Left	Thru	Right	PM DHV	Left	Thru	Right
1	231	6625	96	1	23	800	15	1	23	527	4
2	96	38	130	2	4	4	15	2	15	4	12
3	130	6625	885	3	12	527	77	3	15	800	100
4	885	38	231	4	100	4	23	4	77	4	23

Commercial Vehicle Percentages:

1	Left	Thru	Right	2	Left	Thru	Right	3	Left	Thru	Right	4	Left	Thru	Right
AADT	8%	15%	6%		8%	7%	6%		8%	18%	6%		6%	7%	8%
AM DHV	9%	12%	7%		9%	8%	7%		9%	15%	7%		7%	8%	9%
PM DHV	8%	14%	6%		8%	7%	6%		8%	16%	6%		6%	7%	8%

ANALYSIS

AADT

	NE	NW	NT	SE	SW	ST	ES	EN	ET	WN	WS	WT
CV %	6%	8%	18%	8%	6%	15%	6%	8%	7%	8%	6%	7%
TMOVES Volumes	885	130	6,625	231	96	6,625	130	96	38	231	885	38
PC Turning Volumes	832	120	5,433	213	90	5,631	122	88	35	213	832	35
CV Turning Volumes	53	10	1,193	18	6	994	8	8	3	18	53	3
Total AADT Volume	**890**	**130**	**6630**	**230**	**100**	**6630**	**130**	**100**	**40**	**230**	**890**	**40**
AADT %CV	**6%**	**8%**	**18%**	**8%**	**6%**	**15%**	**6%**	**8%**	**7%**	**8%**	**6%**	**7%**

AM Peak Hour

	NE	NW	NT	SE	SW	ST	ES	EN	ET	WN	WS	WT
%CV	7%	9%	15%	9%	7%	12%	7%	9%	8%	9%	7%	8%
Entering Volume	77	12	527	23	15	800	15	4	4	23	100	4
PC Turning Volumes	72	11	448	21	14	704	14	4	4	21	93	4
CV Turning Volumes	5	1	79	2	1	96	1	0	0	2	7	0
AM-DHV Volume	**77**	**12**	**527**	**23**	**15**	**800**	**15**	**4**	**4**	**23**	**100**	**4**
AM DHV %	**9%**	**9%**	**8%**	**10%**	**15%**	**12%**	**12%**	**4%**	**10%**	**10%**	**11%**	**10%**
AM DHV %CV	**7%**	**9%**	**15%**	**9%**	**7%**	**12%**	**7%**	**9%**	**8%**	**9%**	**7%**	**8%**

PM Peak Hour

	NE	NW	NT	SE	SW	ST	ES	EN	ET	WN	WS	WT
%CV	6%	8%	16%	8%	6%	14%	6%	8%	7%	8%	6%	7%
Entering Volume	100	15	800	23	4	527	12	15	4	23	77	4
PC Turning Volumes	94	14	672	21	4	453	11	14	4	21	72	4
CV Turning Volumes	6	1	128	2	0	74	1	1	0	2	5	0
PM-DHV Volume	**100**	**15**	**800**	**23**	**4**	**527**	**12**	**15**	**4**	**23**	**77**	**4**
PM DHV %	**11%**	**12%**	**12%**	**10%**	**4%**	**8%**	**9%**	**15%**	**10%**	**10%**	**9%**	**10%**
PM DHV %CV	**6%**	**8%**	**16%**	**8%**	**6%**	**14%**	**6%**	**8%**	**7%**	**8%**	**6%**	**7%**

INDOT Traffic Forecasts

Date: Oct-06
Route: SR 25
City/County: Tippecanoe
Des. No.: 9802920
Intersection: HHH at CR 750E

TMOVES Turning Volumes:

AADT	Left	Thru	Right	AM DHV	Left	Thru	Right	PM DHV	Left	Thru	Right
1	115	154	269	1	8	15	23	1	15	15	31
2	269	6070	615	2	31	477	46	2	23	738	77
3	615	154	192	3	77	15	23	3	46	15	15
4	192	6070	115	4	15	738	15	4	23	477	8

Commercial Vehicle Percentages:

1	Left	Thru	Right	2	Left	Thru	Right	3	Left	Thru	Right	4	Left	Thru	Right
AADT	6%	8%	8%	8%	18%	6%	6%	8%	8%	6%	15%	8%
AM DHV	7%	9%	9%	9%	15%	7%	7%	9%	9%	7%	12%	9%
PM DHV	6%	8%	8%	8%	12%	6%	6%	8%	8%	6%	14%	8%

ANALYSIS

AADT

	NE	NW	NT	SE	SW	ST	ES	EN	ET	WN	WS	WT
CV %	8%	6%	8%	6%	8%	8%	6%	8%	18%	8%	6%	15%
TMOVES Volumes	192	615	154	115	269	154	615	269	6,070	115	192	6,070
PC Turning Volumes	177	578	142	108	247	142	578	247	4,977	106	180	5,160
CV Turning Volumes	15	37	12	7	22	12	37	22	1,093	9	12	911
Total AADT Volume	**190**	**620**	**150**	**120**	**270**	**150**	**620**	**270**	**6070**	**120**	**190**	**6070**
AADT %CV	**8%**	**6%**	**8%**	**6%**	**8%**	**8%**	**6%**	**8%**	**18%**	**8%**	**6%**	**15%**

AM Peak Hour

	NE	NW	NT	SE	SW	ST	ES	EN	ET	WN	WS	WT
%CV	9%	7%	9%	7%	9%	9%	7%	9%	15%	9%	7%	12%
Entering Volume	23	77	15	8	23	15	46	31	477	15	15	738
PC Turning Volumes	21	72	14	7	21	14	43	28	405	14	14	649
CV Turning Volumes	2	5	1	1	2	1	3	3	72	1	1	89
AM-DHV Volume	**23**	**77**	**15**	**8**	**23**	**15**	**46**	**31**	**477**	**15**	**15**	**738**
AM DHV %	**12%**	**12%**	**10%**	**7%**	**9%**	**10%**	**7%**	**11%**	**8%**	**13%**	**8%**	**12%**
AM DHV %CV	**9%**	**7%**	**9%**	**7%**	**9%**	**9%**	**7%**	**9%**	**15%**	**9%**	**7%**	**12%**

PM Peak Hour

	NE	NW	NT	SE	SW	ST	ES	EN	ET	WN	WS	WT
%CV	8%	6%	8%	6%	8%	8%	6%	8%	12%	8%	6%	14%
Entering Volume	15	46	15	15	31	15	77	23	738	8	23	477
PC Turning Volumes	14	43	14	14	29	14	72	21	649	7	22	410
CV Turning Volumes	1	3	1	1	2	1	5	2	89	1	1	67
PM-DHV Volume	**15**	**46**	**15**	**15**	**31**	**15**	**77**	**23**	**738**	**8**	**23**	**477**
PM DHV %	**8%**	**7%**	**10%**	**13%**	**11%**	**10%**	**12%**	**9%**	**12%**	**7%**	**12%**	**8%**
PM DHV %CV	**8%**	**6%**	**8%**	**6%**	**8%**	**8%**	**6%**	**8%**	**12%**	**8%**	**6%**	**14%**

INDOT Traffic Forecasts

Date: Oct-06
Route: SR 25
City/County: Tippecanoe
Des. No.: 9802920
Intersection: HHH at CR 900E Connector

TMOVES Turning Volumes:

AADT	Left	Thru	Right		AM DHV	Left	Thru	Right		PM DHV	Left	Thru	Right
1		5500	308		1		669	31		1		431	31
2	308		885		2	31		100		2	31		77
3	885	5500			3	77	431			3	100	669	
4					4					4			

Commercial Vehicle Percentages:

1	Left	Thru	Right	2	Left	Thru	Right	3	Left	Thru	Right	4	Left	Thru	Right
AADT		15%	7%		7%		7%		7%	18%					
AM DHV		12%	8%		8%		8%		8%	15%					
PM DHV		14%	7%		7%		7%		7%	16%					

ANALYSIS

AADT

		NE	NW	NT		SE	SW	ST		ES	EN	ET		WN	WS	WT
CV %		0%	7%	18%		0%	7%	15%		7%	7%	0%		0%	0%	0%
TMOVES Volumes		0	885	5,500		0	308	5,500		885	308	0		0	0	0
PC Turning Volumes		0	823	4,510		0	286	4,675		823	286	0		0	0	0
CV Turning Volumes		0	62	990		0	22	825		62	22	0		0	0	0
Total AADT Volume		**0**	**890**	**5500**		**0**	**310**	**5500**		**890**	**310**	**0**		**0**	**0**	**0**
AADT %CV			**7%**	**18%**			**7%**	**15%**		**7%**	**7%**					

AM Peak Hour

		NE	NW	NT		SE	SW	ST		ES	EN	ET		WN	WS	WT
%CV		0%	8%	15%		0%	8%	12%		8%	8%	0%		0%	0%	0%
Entering Volume		0	77	431		0	31	669		100	31	0		0	0	0
PC Turning Volumes		0	71	366		0	29	589		92	29	0		0	0	0
CV Turning Volumes		0	6	65		0	2	80		8	2	0		0	0	0
AM-DHV Volume		**0**	**77**	**431**		**0**	**31**	**669**		**100**	**31**	**0**		**0**	**0**	**0**
AM DHV %			**9%**	**8%**			**10%**	**12%**		**11%**	**10%**					
AM DHV %CV			**8%**	**15%**			**8%**	**12%**		**8%**	**8%**					

PM Peak Hour

		NE	NW	NT		SE	SW	ST		ES	EN	ET		WN	WS	WT
%CV		0%	7%	16%		0%	7%	14%		7%	7%	0%		0%	0%	0%
Entering Volume		0	100	669		0	31	431		77	31	0		0	0	0
PC Turning Volumes		0	93	562		0	29	371		72	29	0		0	0	0
CV Turning Volumes		0	7	107		0	2	60		5	2	0		0	0	0
PM-DHV Volume		**0**	**100**	**669**		**0**	**31**	**431**		**77**	**31**	**0**		**0**	**0**	**0**
PM DHV %			**11%**	**12%**			**10%**	**8%**		**9%**	**10%**					
PM DHV %CV			**7%**	**16%**			**7%**	**14%**		**7%**	**7%**					

INDOT Traffic Forecasts

Date: Oct-06
Route: SR 25
City/County: Tippecanoe
Des. No.: 9802920
Intersection: CR 900E at CR 900E Connector

TMOVES Turning Volumes:

AADT	Left	Thru	Right		AM DHV	Left	Thru	Right		PM DHV	Left	Thru	Right
1	505	385			1	54	31			1	46	46	
2					2					2			
3		385	692		3		46	77		3		31	62
4	692		505		4	62		46		4	77		54

Commercial Vehicle Percentages:

1	Left	Thru	Right	2	Left	Thru	Right	3	Left	Thru	Right	4	Left	Thru	Right
AADT	7%	9%								9%	7%		7%		7%
AM DHV	8%	10%								10%	8%		8%		8%
PM DHV	7%	9%								9%	7%		7%		7%

ANALYSIS

AADT

		NE	NW	NT		SE	SW	ST		ES	EN	ET		WN	WS	WT
CV %		7%	0%	9%		7%	0%	9%		0%	0%	0%		7%	7%	0%
TMOVES Volumes		692	0	385		505	0	385		0	0	0		505	692	0
PC Turning Volumes		644	0	350		470	0	350		0	0	0		470	644	0
CV Turning Volumes		48	0	35		35	0	35		0	0	0		35	48	0
Total AADT Volume		**690**	**0**	**390**		**510**	**0**	**390**		**0**	**0**	**0**		**510**	**690**	**0**
AADT %CV		**7%**		**9%**		**7%**		**9%**						**7%**	**7%**	

AM Peak Hour

		NE	NW	NT		SE	SW	ST		ES	EN	ET		WN	WS	WT
%CV		8%	0%	10%		8%	0%	10%		0%	0%	0%		8%	8%	0%
Entering Volume		77	0	46		54	0	31		0	0	0		46	62	0
PC Turning Volumes		71	0	41		50	0	28		0	0	0		42	57	0
CV Turning Volumes		6	0	5		4	0	3		0	0	0		4	5	0
AM-DHV Volume		**77**	**0**	**46**		**54**	**0**	**31**		**0**	**0**	**0**		**46**	**62**	**0**
AM DHV %		**11%**		**12%**		**11%**		**8%**						**9%**	**9%**	
AM DHV %CV		**8%**		**10%**		**8%**		**10%**						**8%**	**8%**	

PM Peak Hour

		NE	NW	NT		SE	SW	ST		ES	EN	ET		WN	WS	WT
%CV		7%	0%	9%		7%	0%	9%		0%	0%	0%		7%	7%	0%
Entering Volume		62	0	31		46	0	46		0	0	0		54	77	0
PC Turning Volumes		58	0	28		43	0	42		0	0	0		50	72	0
CV Turning Volumes		4	0	3		3	0	4		0	0	0		4	5	0
PM-DHV Volume		**62**	**0**	**31**		**46**	**0**	**46**		**0**	**0**	**0**		**54**	**77**	**0**
PM DHV %		**9%**		**8%**		**9%**		**12%**						**11%**	**11%**	
PM DHV %CV		**7%**		**9%**		**7%**		**9%**						**7%**	**7%**	

INDOT Traffic Forecasts

Date: Oct-06
Route: SR 25
City/County: Tippecanoe
Des. No.: 9802920
Intersection: HHH at CR 700N

TMOVES Turning Volumes:

AADT	Left	Thru	Right	AM DHV	Left	Thru	Right	PM DHV	Left	Thru	Right
1	300	4962	115	1	31	600	15	1	31	392	8
2	115	154	221	2	8	8	23	2	15	23	23
3	221	4962	615	3	23	392	46	3	23	600	77
4	615	154	300	4	77	23	31	4	46	8	31

Commercial Vehicle Percentages:

1	Left	Thru	Right	2	Left	Thru	Right	3	Left	Thru	Right	4	Left	Thru	Right
AADT	6%	15%	8%		8%	7%	6%		8%	18%	6%		6%	7%	8%
AM DHV	7%	12%	9%		9%	8%	7%		9%	15%	7%		7%	8%	9%
PM DHV	6%	14%	8%		8%	7%	6%		8%	16%	6%		6%	7%	8%

ANALYSIS

AADT

	NE	NW	NT	SE	SW	ST	ES	EN	ET	WN	WS	WT
CV %	6%	8%	18%	6%	8%	15%	6%	8%	7%	8%	6%	7%
TMOVES Volumes	615	221	4,962	300	115	4,962	221	115	154	300	615	154
PC Turning Volumes	578	203	4,069	282	106	4,218	208	106	143	276	578	143
CV Turning Volumes	37	18	893	18	9	744	13	9	11	24	37	11
Total AADT Volume	**620**	**220**	**4960**	**300**	**120**	**4960**	**220**	**120**	**150**	**300**	**620**	**150**
AADT %CV	**6%**	**8%**	**18%**	**6%**	**8%**	**15%**	**6%**	**8%**	**7%**	**8%**	**6%**	**7%**

AM Peak Hour

	NE	NW	NT	SE	SW	ST	ES	EN	ET	WN	WS	WT
%CV	7%	9%	15%	7%	9%	12%	7%	9%	8%	9%	7%	8%
Entering Volume	46	23	392	31	15	600	23	8	8	31	77	23
PC Turning Volumes	43	21	333	29	14	528	21	7	7	28	72	21
CV Turning Volumes	3	2	59	2	1	72	2	1	1	3	5	2
AM-DHV Volume	**46**	**23**	**392**	**31**	**15**	**600**	**23**	**8**	**8**	**31**	**77**	**23**
AM DHV %	**7%**	**10%**	**8%**	**10%**	**13%**	**12%**	**10%**	**7%**	**5%**	**10%**	**12%**	**15%**
AM DHV %CV	**7%**	**9%**	**15%**	**7%**	**9%**	**12%**	**7%**	**9%**	**8%**	**9%**	**7%**	**8%**

PM Peak Hour

	NE	NW	NT	SE	SW	ST	ES	EN	ET	WN	WS	WT
%CV	6%	8%	16%	6%	8%	14%	6%	8%	7%	8%	6%	7%
Entering Volume	77	23	600	31	8	392	23	15	23	31	46	8
PC Turning Volumes	72	21	504	29	7	337	22	14	21	29	43	7
CV Turning Volumes	5	2	96	2	1	55	1	1	2	2	3	1
PM-DHV Volume	**77**	**23**	**600**	**31**	**8**	**392**	**23**	**15**	**23**	**31**	**46**	**8**
PM DHV %	**12%**	**10%**	**12%**	**10%**	**7%**	**8%**	**10%**	**13%**	**15%**	**10%**	**7%**	**5%**
PM DHV %CV	**6%**	**8%**	**16%**	**6%**	**8%**	**14%**	**6%**	**8%**	**7%**	**8%**	**6%**	**7%**

INDOT Traffic Forecasts

Date: Oct-06
Route: SR 25
City/County: Tippecanoe
Des. No.: 9802920
Intersection: CR 1000E over HHH

TMOVES Turning Volumes:

AADT	Left	Thru	Right		AM DHV	Left	Thru	Right		PM DHV	Left	Thru	Right
1		100			1		10			1		10	
2		5385			2		431			2		646	
3		100			3		10			3		10	
4		5385			4		646			4		431	

Commercial Vehicle Percentages:

1	Left	Thru	Right	2	Left	Thru	Right	3	Left	Thru	Right	4	Left	Thru	Right
AADT		10%				18%				10%				15%	
AM DHV		11%				15%				11%				12%	
PM DHV		10%				16%				10%				14%	

ANALYSIS

AADT

		NE	NW	NT		SE	SW	ST		ES	EN	ET		WN	WS	WT
CV %		0%	0%	10%		0%	0%	10%		0%	0%	18%		0%	0%	15%
TMOVES Volumes		0	0	100		0	0	100		0	0	5,385		0	0	5,385
PC Turning Volumes		0	0	90		0	0	90		0	0	4,416		0	0	4,577
CV Turning Volumes		0	0	10		0	0	10		0	0	969		0	0	808
Total AADT Volume		**0**	**0**	**100**		**0**	**0**	**100**		**0**	**0**	**5390**		**0**	**0**	**5390**
AADT %CV				**10%**				**10%**				**18%**				**15%**

AM Peak Hour

		NE	NW	NT		SE	SW	ST		ES	EN	ET		WN	WS	WT
%CV		0%	0%	11%		0%	0%	11%		0%	0%	15%		0%	0%	12%
Entering Volume		0	0	10		0	0	10		0	0	431		0	0	646
PC Turning Volumes		0	0	9		0	0	9		0	0	366		0	0	568
CV Turning Volumes		0	0	1		0	0	1		0	0	65		0	0	78
AM-DHV Volume		**0**	**0**	**10**		**0**	**0**	**10**		**0**	**0**	**431**		**0**	**0**	**646**
AM DHV %				**10%**				**10%**				**8%**				**12%**
AM DHV %CV				**11%**				**11%**				**15%**				**12%**

PM Peak Hour

		NE	NW	NT		SE	SW	ST		ES	EN	ET		WN	WS	WT
%CV		0%	0%	10%		0%	0%	10%		0%	0%	16%		0%	0%	14%
Entering Volume		0	0	10		0	0	10		0	0	646		0	0	431
PC Turning Volumes		0	0	9		0	0	9		0	0	543		0	0	371
CV Turning Volumes		0	0	1		0	0	1		0	0	103		0	0	60
PM-DHV Volume		**0**	**0**	**10**		**0**	**0**	**10**		**0**	**0**	**646**		**0**	**0**	**431**
PM DHV %				**10%**				**10%**				**12%**				**8%**
PM DHV %CV				**10%**				**10%**				**16%**				**14%**

INDOT Traffic Forecasts

Date: Oct-06
Route: SR 25
City/County: Tippecanoe
Des. No.: 9802920
Intersection: HHH over CR 900N

TMOVES Turning Volumes:

AADT	Left	Thru	Right		AM DHV	Left	Thru	Right		PM DHV	Left	Thru	Right
1		5385			1		646			1		431	
2		575			2		40			2		75	
3		5385			3		431			3		646	
4		575			4		75			4		40	

Commercial Vehicle Percentages:

1	Left	Thru	Right	2	Left	Thru	Right	3	Left	Thru	Right	4	Left	Thru	Right
AADT		15%				10%				18%				10%	
AM DHV		12%				9%				15%				9%	
PM DHV		14%				10%				16%				10%	

ANALYSIS

AADT

		NE	NW	NT		SE	SW	ST		ES	EN	ET		WN	WS	WT
CV %		0%	0%	18%		0%	0%	15%		0%	0%	10%		0%	0%	10%
TMOVES Volumes		0	0	5,385		0	0	5,385		0	0	575		0	0	575
PC Turning Volumes		0	0	4,416		0	0	4,577		0	0	518		0	0	518
CV Turning Volumes		0	0	969		0	0	808		0	0	58		0	0	58
Total AADT Volume		**0**	**0**	**5390**		**0**	**0**	**5390**		**0**	**0**	**580**		**0**	**0**	**580**
AADT %CV				**18%**				**15%**				**10%**				**10%**

AM Peak Hour

		NE	NW	NT		SE	SW	ST		ES	EN	ET		WN	WS	WT
%CV		0%	0%	15%		0%	0%	12%		0%	0%	9%		0%	0%	9%
Entering Volume		0	0	431		0	0	646		0	0	40		0	0	75
PC Turning Volumes		0	0	366		0	0	568		0	0	36		0	0	68
CV Turning Volumes		0	0	65		0	0	78		0	0	4		0	0	7
AM-DHV Volume		**0**	**0**	**431**		**0**	**0**	**646**		**0**	**0**	**40**		**0**	**0**	**75**
AM DHV %				**8%**				**12%**				**7%**				**13%**
AM DHV %CV				**15%**				**12%**				**9%**				**9%**

PM Peak Hour

		NE	NW	NT		SE	SW	ST		ES	EN	ET		WN	WS	WT
%CV		0%	0%	16%		0%	0%	14%		0%	0%	10%		0%	0%	10%
Entering Volume		0	0	646		0	0	431		0	0	75		0	0	40
PC Turning Volumes		0	0	543		0	0	371		0	0	68		0	0	36
CV Turning Volumes		0	0	103		0	0	60		0	0	8		0	0	4
PM-DHV Volume		**0**	**0**	**646**		**0**	**0**	**431**		**0**	**0**	**75**		**0**	**0**	**40**
PM DHV %				**12%**				**8%**				**13%**				**7%**
PM DHV %CV				**16%**				**14%**				**10%**				**10%**

INDOT Traffic Forecasts

Date: Oct-06
Route: SR 25
City/County: Tippecanoe
Des. No.: 9802920
Intersection: HHH at SR 25 Connector

TMOVES Turning Volumes:

AADT	Left	Thru	Right		AM DHV	Left	Thru	Right		PM DHV	Left	Thru	Right
1	200		885		1	18		105		1	20		72
2	890	4487			2	72	359			2	104	542	
3					3					3			
4		4490	195		4		541	20		4		358	18

Commercial Vehicle Percentages:

1	Left	Thru	Right	2	Left	Thru	Right	3	Left	Thru	Right	4	Left	Thru	Right
AADT	8%		6%		6%	18%								15%	8%
AM DHV	9%		7%		7%	15%								12%	9%
PM DHV	8%		6%		6%	16%								14%	8%

ANALYSIS

AADT

		NE	NW	NT		SE	SW	ST		ES	EN	ET		WN	WS	WT
CV %		0%	0%	0%		8%	6%	0%		0%	6%	18%		8%	0%	15%
TMOVES Volumes		0	0	0		200	885	0		0	890	4,487		195	0	4,490
PC Turning Volumes		0	0	0		184	832	0		0	837	3,679		179	0	3,817
CV Turning Volumes		0	0	0		16	53	0		0	53	808		16	0	674
Total AADT Volume		**0**	**0**	**0**		**200**	**890**	**0**		**0**	**890**	**4490**		**200**	**0**	**4490**
AADT %CV						**8%**	**6%**				**6%**	**18%**		**8%**		**15%**

AM Peak Hour

		NE	NW	NT		SE	SW	ST		ES	EN	ET		WN	WS	WT
%CV		0%	0%	0%		9%	7%	0%		0%	7%	15%		9%	0%	12%
Entering Volume		0	0	0		18	105	0		0	72	359		20	0	541
PC Turning Volumes		0	0	0		16	98	0		0	67	305		18	0	476
CV Turning Volumes		0	0	0		2	7	0		0	5	54		2	0	65
AM-DHV Volume		**0**	**0**	**0**		**18**	**105**	**0**		**0**	**72**	**359**		**20**	**0**	**541**
AM DHV %						**9%**	**12%**				**8%**	**8%**		**10%**		**12%**
AM DHV %CV						**9%**	**7%**				**7%**	**15%**		**9%**		**12%**

PM Peak Hour

		NE	NW	NT		SE	SW	ST		ES	EN	ET		WN	WS	WT
%CV		0%	0%	0%		8%	6%	0%		0%	6%	16%		8%	0%	14%
Entering Volume		0	0	0		20	72	0		0	104	542		18	0	358
PC Turning Volumes		0	0	0		18	68	0		0	98	455		17	0	308
CV Turning Volumes		0	0	0		2	4	0		0	6	87		1	0	50
PM-DHV Volume		**0**	**0**	**0**		**20**	**72**	**0**		**0**	**104**	**542**		**18**	**0**	**358**
PM DHV %						**10%**	**8%**				**12%**	**12%**		**9%**		**8%**
PM DHV %CV						**8%**	**6%**				**6%**	**16%**		**8%**		**14%**

INDOT Traffic Forecasts

Date: Oct-06
Route: SR 25
City/County: Tippecanoe
Des. No.: 9802920
Intersection: SR 25 Connector at Old SR 25

TMOVES Turning Volumes:

AADT	Left	Thru	Right		AM DHV	Left	Thru	Right		PM DHV	Left	Thru	Right
1					1					1			
2		542	430		2		23	59		2		85	34
3	303		792		3	24		68		3	24		98
4	655	301			4	64	19			4	58	60	

Commercial Vehicle Percentages:

1	Left	Thru	Right	2	Left	Thru	Right	3	Left	Thru	Right	4	Left	Thru	Right
AADT						8%	7%		7%		7%		7%	8%	
AM DHV						9%	8%		8%		8%		8%	9%	
PM DHV						8%	7%		7%		7%		7%	8%	

ANALYSIS

AADT

		NE	NW	NT		SE	SW	ST		ES	EN	ET		WN	WS	WT
CV %		7%	7%	0%		0%	0%	0%		7%	0%	8%		0%	7%	8%
TMOVES Volumes		792	303	0		0	0	0		430	0	542		0	655	301
PC Turning Volumes		737	282	0		0	0	0		400	0	499		0	609	277
CV Turning Volumes		55	21	0		0	0	0		30	0	43		0	46	24
Total AADT Volume		**790**	**300**	**0**		**0**	**0**	**0**		**430**	**0**	**540**		**0**	**660**	**300**
AADT %CV		**7%**	**7%**							**7%**		**8%**			**7%**	**8%**

AM Peak Hour

		NE	NW	NT		SE	SW	ST		ES	EN	ET		WN	WS	WT
%CV		8%	8%	0%		0%	0%	0%		8%	0%	9%		0%	8%	9%
Entering Volume		68	24	0		0	0	0		59	0	23		0	64	19
PC Turning Volumes		63	22	0		0	0	0		54	0	21		0	59	17
CV Turning Volumes		5	2	0		0	0	0		5	0	2		0	5	2
AM-DHV Volume		**68**	**24**	**0**		**0**	**0**	**0**		**59**	**0**	**23**		**0**	**64**	**19**
AM DHV %		**9%**	**8%**							**14%**		**4%**			**10%**	**6%**
AM DHV %CV		**8%**	**8%**							**8%**		**9%**			**8%**	**9%**

PM Peak Hour

		NE	NW	NT		SE	SW	ST		ES	EN	ET		WN	WS	WT
%CV		7%	7%	0%		0%	0%	0%		7%	0%	8%		0%	7%	8%
Entering Volume		98	24	0		0	0	0		34	0	85		0	58	60
PC Turning Volumes		91	22	0		0	0	0		32	0	78		0	54	55
CV Turning Volumes		7	2	0		0	0	0		2	0	7		0	4	5
PM-DHV Volume		**98**	**24**	**0**		**0**	**0**	**0**		**34**	**0**	**85**		**0**	**58**	**60**
PM DHV %		**12%**	**8%**							**8%**		**16%**			**9%**	**20%**
PM DHV %CV		**7%**	**7%**							**7%**		**8%**			**7%**	**8%**

INDOT Traffic Forecasts

Date: Oct-06
Route: SR 25
City/County: Tippecanoe
Des. No.: 9802920
Intersection: HHH over CR 1100E

TMOVES Turning Volumes:

AADT	Left	Thru	Right		AM DHV	Left	Thru	Right		PM DHV	Left	Thru	Right
1		100			1		10			1		10	
2		4692			2		377			2		561	
3		100			3		10			3		10	
4		4692			4		561			4		431	

Commercial Vehicle Percentages:

1	Left	Thru	Right	2	Left	Thru	Right	3	Left	Thru	Right	4	Left	Thru	Right
AADT		10%				16%				10%				18%	
AM DHV		11%				11%				11%				14%	
PM DHV		10%				13%				10%				19%	

ANALYSIS

AADT

		NE	NW	NT		SE	SW	ST		ES	EN	ET		WN	WS	WT
CV %		0%	0%	10%		0%	0%	10%		0%	0%	16%		0%	0%	18%
TMOVES Volumes		0	0	100		0	0	100		0	0	4,692		0	0	4,692
PC Turning Volumes		0	0	90		0	0	90		0	0	3,941		0	0	3,847
CV Turning Volumes		0	0	10		0	0	10		0	0	751		0	0	845
Total AADT Volume		**0**	**0**	**100**		**0**	**0**	**100**		**0**	**0**	**4690**		**0**	**0**	**4690**
AADT %CV				**10%**				**10%**				**16%**				**18%**

AM Peak Hour

		NE	NW	NT		SE	SW	ST		ES	EN	ET		WN	WS	WT
%CV		0%	0%	11%		0%	0%	11%		0%	0%	11%		0%	0%	14%
Entering Volume		0	0	10		0	0	10		0	0	377		0	0	561
PC Turning Volumes		0	0	9		0	0	9		0	0	336		0	0	482
CV Turning Volumes		0	0	1		0	0	1		0	0	41		0	0	79
AM-DHV Volume		**0**	**0**	**10**		**0**	**0**	**10**		**0**	**0**	**377**		**0**	**0**	**561**
AM DHV %				**10%**				**10%**				**8%**				**12%**
AM DHV %CV				**11%**				**11%**				**11%**				**14%**

PM Peak Hour

		NE	NW	NT		SE	SW	ST		ES	EN	ET		WN	WS	WT
%CV		0%	0%	10%		0%	0%	10%		0%	0%	13%		0%	0%	19%
Entering Volume		0	0	10		0	0	10		0	0	561		0	0	431
PC Turning Volumes		0	0	9		0	0	9		0	0	488		0	0	349
CV Turning Volumes		0	0	1		0	0	1		0	0	73		0	0	82
PM-DHV Volume		**0**	**0**	**10**		**0**	**0**	**10**		**0**	**0**	**561**		**0**	**0**	**431**
PM DHV %				**10%**				**10%**				**12%**				**9%**
PM DHV %CV				**10%**				**10%**				**13%**				**19%**